POLIplex® PE Pipe & Fittings Systems

Product Catalogue

iPLEX Pipelines

Disclaimer

Section 9 - **PE Moulded & Fabricated Fittings**

Section 10 - **Valves & Couplings**

Section 11 - **Poly Plus Compression Fittings**

1.0 Introduction

Polyethylene (PE) pipes have been produced in Australia and New Zealand since the mid 1950's. Whilst initially in small diameters for industrial and agricultural applications, polyethylene pipes and fittings are now available in diameters as large as 2000mm.

The first Australian Standard for polyethylene pipe was released in 1962 and Iplex commenced production of its POLIplex® range in the early 1970's.

Usage has grown rapidly over the past forty years with approximately 200,000 tonnes of PE pipes now being produced annually in Australasia. Over this period, polyethylene pipe resins have more than trebled in strength and Iplex's POLIplex® range has become one of Australia's most widely used plastic pipe systems, with strong forecast growth over the coming decades.

1.1 Applications

POLIplex® pipes are used for all types of liquids and gases. Common applications include:

- Urban water and gas supply #1
- Mine dewatering
- Irrigation supply
- Slurry pipelines
- Vacuum, pressure and gravity sewer systems #2
- Submarine pipelines and ocean outfalls
- Trenchless pipeline installation and rehabilitation installed by directional drilling, slip lining and pipe bursting methods
- Industrial process pipe work
- Compressed air services
- Electricity and telecommunication cable conduits
- Upstream coal seam gas and water pipelines

#1 *Refer to Iplex POLIplex® BLUE catalogue*
#2 *Refer to Iplex SewerPlex catalogue*

1.2 Benefits

POLIplex® polyethylene pipes offer the following benefits:

- Full axial restraint which eliminates the need for thrust blocks
- Low celerity material minimises water hammer
- UV stability for above ground pipelines
- Rust and corrosion free
- Long length availability to minimise joints
- Complete range of fittings
- Weldable using butt and electrofusion methods
- High ring stiffness for deeply buried pipelines
- Excellent abrasion resistance
- Possibility of 100+ year asset life
- Diameter range from DN16 to DN2000
- Security of Third-Party certification to Australian Standard AS/NZS 4130

1.3 Joining Systems

POLIplex® polyethylene pipes may be joined economically using thermal butt-welding or electrofusion equipment; alternately diameters up to DN110 are commonly joined using Iplex compression couplings complying with AS/NZS 4129. These fittings make joints quick and easy, which can be undone and reused when altering the system layout.

In summary, developments in Iplex POLIplex® polyethylene pipe and fitting materials will continue to improve their already outstanding properties and afford the asset owner confidence in long term durability and asset life.

2.0 Product Data

2.1 Material Properties

Iplex POLIplex® AS/NZS 4130 pipes are manufactured from PE100 polyethylene resin, with a 50-year minimum required strength of 10MPa.

Table 1 Physical properties of polyethylene

PE material type	PE100
MRS (50 year)	10MPa
Flexural yield strength	32MPa
Circumferential flexural modulus (3 minutes)	950MPa
Circumferential flexural creep modulus (50 year)	260MPa
Density	955kg/m^3
Tensile yield stress (50mm/min)	25MPa
Tensile yield strain (50mm/min)	10%
Tensile modulus	900MPa
Poisson's ratio	0.4
Thermal expansion coefficient	1.8×10^{-4}/°C
Thermal conductivity	0.38W/m.K
Durometer hardness (ASTMD2240)	63 Shore D

2.2 PE100 Material Composition

The PE100 polyethylene resin used in POLIplex® pipes and fittings are pre-compounded, either black or coloured with pigment, complying with AS/NZS 4131. Anti-oxidants are used to inhibit oxidation of the polymer at the compounding stage and during subsequent processing.

Carbon black is used in all black POLIplex® pipe at a concentration of 2.25 ± 0.25% by mass as an ultra violet radiation absorber.

In natural and coloured POLIplex® materials, hindered amine light stabiliser (HALS), ultra violet absorber, is used in lieu of carbon black.

2.3 Thermal Properties

The co-efficient of thermal linear expansion of polyethylene varies with temperature but at ambient lies in the range 1.2 to 2.4 x 10^{-4} per degree C. In broad terms, this is about twenty times that of steel, and therefore unrestrained pipe will expand or contract much more than the steel structure that may be supporting it.

Should the pipe be fully restrained, the strain due to thermal change will generate stress in the material. However due to the relatively low tensile deformation modulus of polyethylene and assuming a typical ambient temperature fluctuation of less than 40°C, it can be assumed that the safe allowable stress will not be exceeded. Over the longer term, stress relaxation will increase the ability of polyethylene to accommodate high thermal strains.

The conductivity of polyethylene varies with temperature almost linearly and is typically 0.47W/m.K at 0°C to 0.37W/m.K at 70°C.

The specific heat of polyethylene varies with temperature from 1800 Joules/kg.K at 0°C to 2200J/kg.K at 60°C.

At temperatures above 25°C it is necessary to rerate polyethylene pressure pipe systems. Table 2 provides guidance as to the maximum operating pressure of PE100 pipes at temperature. It should be noted that at constant temperatures greater than 40°C, the 50-year design life of POLIplex® pipes may be reduced.

Table 2 Thermal rerating of PE100 polyethylene POLIplex® pipe

Maximum allowable operating pressure - PE100 Water pipe (m head)

Temp °C	PN4	PN6.3	PN8	PN10	PN12.5	PN16	PN20	PN25
20	40	63	80	100	125	160	200	250
25	36	58	73	91	115	145	182	227
30	36	58	73	91	115	145	182	227
35	33	53	67	83	106	133	167	208
40	33	53	67	83	106	133	167	208
45 (35y)*	31	49	62	77	99	123	154	192
50 (22y)*	29	46	57	71	91	114	143	179
55 (15y)*	29	46	57	71	91	114	143	179
60 (7y)*	27	43	53	67	85	107	133	167
80 (1y)*	20	32	40	50	63	80	100	125

NOTE:

i. The values tabled are for POLIplex® pipe manufactured to AS/NZS 4130 and fittings made from compounds complying with AS/NZS 4131.

* ii. The times given in years as (35y) are allowable extrapolation limits obtained by applying the factors in Table 1 of ISO 9080 to two years of test data at 80°C. Where appropriate, specific advice should be obtained from the manufacturer, and data provided shall be derived from testing to ISO 9080.

2.4 Chemical Resistance

Polyethylene is a polyolefin resin, in chemical terms a non-polar high molecular weight paraffin of the hydrocarbon family. Hence it is very resistant to (non-oxidising) strong acids, strong bases and salts. It is mildly affected by aliphatic solvents although aromatic and chlorinated solvents will cause some swelling. Polyethylene is affected by strongly oxidising substances such as halogens and concentrated inorganic acids. POLIplex® pressure pipes should not be used to convey water disinfected with chlorine dioxide at any temperature which has been found to rapidly deplete the antioxidant additives at elevated temperature.

A full Chemical Resistance Library can be viewed on Iplex's website www.iplex.com.au.

2.5 Standards and Approvals

POLIplex® is an integrated family of polyethylene pipes produced by Iplex, based on PE100 resin. POLIplex® pipes are manufactured to AS/NZS 4130 from resin compounds complying with AS/NZS 4131 and are StandardsMark licensed to AS/NZS 4130 by third-party certifier, SAI Global.

3.0 Pipe and Dimensions

3.1 POLIplex® PE100

POLIplex® diameters range from DN16 to DN2000, with pressure classes of up to 2500kPa. Pipe sizes up to DN160 can be supplied in coil lengths of up to 300 metres in some diameters. Larger diameters are typically 12m long, although longer lengths are manufactured by arrangement.

Note - The nominal diameter of POLIplex® pipes refers to the outside diameter in accordance with international practice.

Table 3 POLiplex® - PE100 Series 1 - Pressure pipe dimensions AS/NZS4130

SDR	41				26				21				17				13.6				11				9				7.4				SDR
PN for PE100	4				6.3				8				10				12.5				16				20				25				PN for PE100
DN	Min Wall	Mean ID	Ovality Max	Weight Ave kg/m	Min Wall	Mean ID	Ovality Max	Weight Ave kg/m	Min Wall	Mean ID	Ovality Max	Weight Ave kg/m	Min Wall	Mean ID	Ovality Max	Weight Ave kg/m	Min Wall	Mean ID	Ovality Max	Weight Ave kg/m	Min Wall	Mean ID	Ovality Max	Weight Ave kg/m	Min Wall	Mean ID	Ovality Max	Weight Ave kg/m	Min Wall	Mean ID	Ovality Max	Weight Ave kg/m	DN
16	-	-	-	-	-	-	-	-	-	-	-	-	-	-	-	-	-	-	-	-	1.6	12.7	1.2	0.08	1.8	12.3	1.2	0.08	2.2	11.4	1.2	0.10	16
20	-	-	-	-	-	-	-	-	-	-	-	-	-	-	-	-	1.6	16.7	1.2	0.10	1.9	16.0	1.2	0.11	2.3	15.2	1.2	0.13	2.8	14.2	1.2	0.16	20
25	-	-	-	-	-	-	-	-	-	-	-	-	1.6	21.7	1.2	0.12	1.9	21.0	1.2	0.14	2.3	20.2	1.2	0.17	2.8	19.2	1.2	0.20	3.5	17.7	1.2	0.24	25
32	-	-	-	-	-	-	-	-	1.6	28.7	1.3	0.16	1.9	28.0	1.3	0.19	2.4	27.0	1.3	0.23	2.9	26.0	1.3	0.27	3.6	24.5	1.3	0.33	4.4	22.8	1.3	0.39	32
40	-	-	-	-	-	-	-	-	1.9	36.1	1.4	0.24	2.4	35.0	1.4	0.30	3.0	33.8	1.4	0.36	3.7	32.3	1.4	0.43	4.5	30.6	1.4	0.52	5.5	28.5	1.4	0.61	40
50	-	-	-	-	-	-	-	-	2.4	45.0	1.4	0.38	3.0	43.9	1.4	0.46	3.7	42.4	1.4	0.55	4.6	40.4	1.4	0.67	5.6	38.4	1.4	0.80	6.9	35.7	1.4	0.95	50
63	-	-	-	-	2.4	58.1	1.5	0.48	3.0	56.9	1.5	0.58	3.8	55.2	1.5	0.73	4.7	53.3	1.5	0.88	5.8	51.0	1.5	1.07	7.1	48.2	1.5	1.28	8.6	45.1	1.5	1.50	63
75	-	-	-	-	2.9	69.2	1.6	0.68	3.6	67.7	1.6	0.83	4.5	65.8	1.6	1.03	5.5	63.7	1.6	1.23	6.8	61.0	1.6	1.49	8.4	57.6	1.6	1.79	10.3	53.6	1.6	2.13	75
90	-	-	-	-	3.5	83.0	1.8	0.99	4.3	81.3	1.8	1.20	5.4	79.0	1.8	1.48	6.6	76.5	1.8	1.77	8.2	73.0	1.8	2.16	10.1	69.1	1.8	2.59	12.3	64.5	1.8	3.05	90
110	2.7	104.7	2.2	0.95	4.3	101.3	2.2	1.48	5.3	99.2	2.2	1.80	6.6	96.5	2.2	2.20	8.1	93.3	2.2	2.66	10.0	89.4	2.2	3.20	12.3	84.5	2.2	3.84	15.1	78.6	2.2	4.57	110
125	3.1	118.9	2.5	1.24	4.8	115.4	2.5	1.86	6.0	112.9	2.5	2.30	7.4	109.9	2.5	2.80	9.2	106.1	2.5	3.42	11.4	101.5	2.5	4.15	14.0	96.1	2.5	4.96	17.1	89.5	2.5	5.88	125
140	3.5	133.2	2.8	1.56	5.4	129.2	2.8	2.35	6.7	126.5	2.8	2.87	8.3	123.0	2.8	3.52	10.3	118.9	2.8	4.29	12.7	113.9	2.8	5.17	15.7	107.6	2.8	6.23	19.2	100.2	2.8	7.39	140
160	4.0	152.3	3.2	2.02	6.2	147.6	3.2	3.08	7.7	144.5	3.2	3.77	9.5	140.7	3.2	4.59	11.8	135.9	3.2	5.60	14.6	130.0	3.2	6.78	17.9	123.0	3.2	8.11	21.9	114.7	3.2	9.62	160
180	4.4	171.5	3.6	2.51	6.9	166.3	3.6	3.84	8.6	163.1	3.6	4.74	10.7	158.3	3.6	5.81	13.3	152.8	3.6	7.10	16.4	146.3	3.6	8.58	20.1	138.5	3.6	10.26	24.6	129.1	3.6	12.16	180
200	4.9	190.5	4.0	3.08	7.7	184.6	4.0	4.76	9.6	180.6	4.0	5.87	11.9	175.8	4.0	7.16	14.7	170.0	4.0	8.71	18.2	162.5	4.0	10.57	22.4	153.7	4.0	12.68	27.3	143.4	4.0	15.00	200
225	5.5	214.4	4.5	3.90	8.6	207.9	4.5	5.98	10.8	203.3	4.5	7.42	13.4	197.8	4.5	9.09	16.6	191.0	4.5	11.06	20.5	182.9	4.5	13.39	25.1	173.2	4.5	16.00	30.8	161.3	4.5	19.02	225
250	6.2	238.0	5.0	4.89	9.6	230.9	5.0	7.41	11.9	226.0	5.0	9.08	14.8	220.0	5.0	11.14	18.4	212.4	5.0	13.63	22.7	203.4	5.0	16.46	27.9	192.5	5.0	19.73	34.2	179.2	5.0	23.48	250
280	6.9	266.7	9.8	6.06	10.7	258.7	9.8	9.25	13.4	253.0	9.8	11.46	16.6	246.3	9.8	13.99	20.6	237.9	9.8	17.08	25.4	227.8	9.8	20.64	31.3	215.4	9.8	24.80	38.3	200.7	9.8	29.44	280
315	7.7	300.2	11.1	7.62	12.1	290.9	11.1	11.78	15.0	284.9	11.1	14.40	18.7	276.6	11.1	17.72	23.2	267.6	11.1	21.64	28.6	256.3	11.1	26.13	35.2	242.4	11.1	31.38	43.0	226.1	11.1	37.16	315
355	8.7	338.2	12.5	9.69	13.6	327.9	12.5	14.89	16.9	321.0	12.5	18.28	21.1	312.1	12.5	22.55	26.1	301.6	12.5	27.43	32.2	288.8	12.5	33.16	39.6	273.3	12.5	39.76	48.5	254.6	12.5	47.24	355
400	9.8	380.0	14.0	12.28	15.3	369.5	14.0	18.88	19.1	361.5	14.0	23.31	23.7	351.9	14.0	28.50	29.4	339.9	14.0	34.79	36.3	325.4	14.0	42.10	44.7	307.8	14.0	50.55	54.6	287.0	14.0	59.92	400
450	11.0	428.9	15.6	15.49	17.2	415.8	15.6	23.87	21.5	406.8	15.6	29.48	26.7	395.9	5.6	36.11	33.1	382.4	15.6	44.07	40.9	366.1	15.6	53.31	50.2	346.5	15.6	63.90	61.5	322.8	15.6	75.92	450
500	12.3	476.3	17.5	19.28	19.1	462.0	17.5	29.45	23.9	452.0	17.5	36.37	29.6	439.9	17.5	44.48	36.8	424.9	17.5	54.38	45.4	406.8	17.5	65.78	55.8	385.0	17.5	78.86	POA	POA	POA	POA	500
560	13.7	533.6	19.6	24.00	21.4	517.4	19.6	36.91	26.7	506.4	19.6	45.52	33.2	492.7	19.6	55.89	41.2	475.8	19.6	68.22	50.8	455.8	19.6	82.40	62.5	430.3	19.6	98.93	POA	POA	POA	POA	560
630	15.4	600.4	22.1	30.37	24.1	582.1	22.1	46.77	30.0	569.8	22.1	57.50	37.3	554.4	22.1	70.62	46.3	535.5	22.1	86.23	57.2	512.6	22.1	104.42	70.3	484.1	22.1	125.20	-	-	-	-	630
710	17.4	676.5	24.9	38.65	27.2	655.9	24.9	59.45	33.9	641.9	24.9	73.22	42.1	624.6	24.9	89.82	52.2	603.4	24.9	109.55	64.5	577.6	24.9	132.64	79.3	546.5	24.9	159.13	-	-	-	-	710
800	19.6	762.3	28.0	49.01	30.6	739.2	28.0	75.29	38.1	723.4	28.0	92.80	47.4	703.9	28.0	113.89	58.8	680.0	28.0	138.96	72.5	651.0	28.0	168.11	89.3	615.9	28.0	201.90	-	-	-	-	800
900	22.0	857.8	31.5	61.81	34.4	831.7	31.5	95.23	42.9	813.9	31.5	117.42	53.5	791.7	31.5	144.55	66.2	764.9	31.5	176.04	81.7	732.4	31.5	212.91	-	-	-	-	-	-	-	-	900
1000	24.5	952.9	35.0	76.54	38.2	924.1	35.0	117.50	47.7	904.2	35.0	145.07	59.3	879.8	35.0	178.06	72.5	852.1	35.0	214.41	90.3	814.9	35.0	261.40	-	-	-	-	-	-	-	-	1000
1200	29.4	1143.1	42.0	110.14	45.9	1108.5	42.0	169.18	57.2	1084.7	42.0	208.73	67.9	1062.7	42.0	245.17	88.2	1020.0	42.0	312.54	-	-	-	-	-	-	-	-	-	-	-	-	1200
1400	34.4	1332.6	49.0	150.19	53.2	1293.1	49.0	239.54	66.7	1266.1	49.0	283.64	82.4	1233.1	49.0	346.07	-	-	-	-	-	-	-	-	-	-	-	-	-	-	-	-	1400
1600	39.3	1522.3	56.0	195.75	61.3	1476.1	56.0	300.95	76.2	1447.0	56.0	370.23	94.1	1409.4	56.0	451.49	-	-	-	-	-	-	-	-	-	-	-	-	-	-	-	-	1600
1800	43.8	1716.0	-	245.95	69.1	1662.8	-	382.16	85.7	1628.0	63.0	468.94	-	-	-	-	-	-	-	-	-	-	-	-	-	-	-	-	-	-	-	-	1800
2000	48.8	1906.4	-	304.41	76.9	1847.4	-	472.24	95.2	1808.9	70.0	578.91	-	-	-	-	-	-	-	-	-	-	-	-	-	-	-	-	-	-	-	-	2000

Note:
1) All dimensions are in millimetres and mass in kg/m.
2) Nominal Diameter (DN) equals outside diamter.
3) These dimensions also apply to THERMAPIPE®.

3.2 Rural / Imperial Polyethylene Pipes

Iplex manufactures both Greenline and Redline imperial rural polyethylene pipe systems. Redline poly is made to AS 2698.2 dimensions and has a maximum operating pressure of 900kPa at 20°C.

Greenline, our economy polyethylene pipe for rural applications, is manufactured to Iplex's own in-house specifications and has a maximum pressure rating for water of 800kPa at 20 °C.

Both Greenline and Redline pipes use Iplex's rural range of compression fittings. Sizes range from 3/4 inch to 2 inch nominal inside diameter.

Table 4 Greenline economy rural pipe dimensions

Nominal ID in (mm)(Inch)	ID ave (mm)	Wall ave (mm)	OD ave (mm)
20 (3/4")	19.0	1.6	22.2
25 (1")	25.3	1.7	28.7
32 (1 ¼")	31.6	2.0	35.6
40 (1 ½")	38.0	2.4	42.8
50 (2")	50.9	3.2	57.3

Table 5 Redline rural rural pipe to AS 2698.2 dimensions

Nominal ID in (mm)(Inch)	ID ave (mm)	Wall ave (mm)	OD ave (mm)
20 (3/4")	19.0	1.8	22.6
25 (1")	25.3	1.9	29.1
32 (1 ¼")	31.6	2.3	36.2
40 (1 ½")	38.0	2.7	43.4
50 (2")	50.9	3.5	57.9

Note: Only available in Western Australia.

3.3 THERMAPIPE®

By the use of a highly reflective white material on the external skin, THERMAPIPE® reduces the absorption of heat. The white material is extruded concurrently with the black pipe wall, forming an integral part of the pipe. Formulation of the white compound with HALS (Hindered Amine Light Stabilisers) and titanium dioxide increases the longevity of UV resistance in the outer layer.

Extensive testing has demonstrated that solar radiation has substantial and predictably less effect on THERMAPIPE® as opposed to conventional black polyethylene pipes under the same conditions.

In all respects, THERMAPIPE® matches or exceeds the performance requirements of AS/NZS 4130 pipes for pressure applications.

By limiting the surface temperature of above ground polyethylene pipelines, a thinner walled pipe can be used than would otherwise be required in a given application.

THERMAPIPE® achieves the following performance improvements relative to black pipe:

- Thinner walled pipes providing more efficient pipe design
- Lower pipe cost
- Lower pumping cost due to greater hydraulic capacity
- Reduced thermal expansion / contraction
- Less requirement to 'snake' pipelines
- Extra purchase length reduced to +2% to accommodate snaking (Versus 4% for black)
- Reduced pipe movements on tailings dam walls and pipe racks
- Lower anchorage loads
- Reduced thermal stresses in the pipe material
- Higher pipe stiffness
- Greater resistance to collapse under vacuum effect
- Contents in THERMAPIPE® remain cooler than in equivalent black pipes

Design for high temperature service

Above ground polyethylene pipes will absorb and disperse thermal energy via a number of mechanisms. Incoming solar radiation heats the pipe whilst re-radiation, convection and conduction to the fluid conveyed will act to cool the pipe. Variation in the incoming solar radiation intensity with time of day, cloud cover, latitude, altitude, season and pipeline orientation combine to be major determinants of pipe temperature. Wind velocity, ambient temperature, flow rate and nature of the conveyed fluid are also variables acting to influence pipe wall temperature.

Much of this complexity can be reduced by considering that any pipe design must accommodate the most arduous environmental conditions to be encountered. For polyethylene pipelines, this requires the estimation of long-term temperature conditions in the pipe, especially during summer.

Testing of conventional black polyethylene pipe and the white THERMAPIPE® material by an independent laboratory has confirmed lower radiation absorption, resulting in substantial reductions in temperature with this material.

Radiation absorption*	
POLIplex® Black PE	96%
THERMAPIPE®	42%

** Absorptance, the ratio of the amount of radiation absorbed by a surface to the amount of radiation incident upon it.*

THERMAPIPE® maintains a lower operating temperature to reduce the thermal rerating requirements of above ground pipelines.

4.0 Pipeline Design

4.1 Hydraulic Design

Iplex POLIplex® pipes are used in gravity drainage, gravity pressure and pumped pressure applications. AS 2200 nominates a Colebrook-White k-value for thermoplastics pipes in the range of 0.003 – 0.015mm. Iplex research suggests an average value of 0.007mm is appropriate for POLIplex® PE100 pipe.

In any hydraulic system, the choice of pipe diameter and pressure class will depend on the following factors including:

- The required flow rate including any planned future increases
- The friction losses caused by the pipes and fittings
- The fluid type
- The longitudinal section of the proposed pipeline route
- In the case of pressurised gravity systems, the available head differential
- The relative cost of different pipe diameters and classes
- Financial parameters such as expected interest rate and repayment terms
- For pumped systems – the cost of power and anticipated inflation rate for energy costs
- Estimated water hammer and surges caused during normal operation and due to power failure
- Specified field and test pressures
- Environmental factors including temperature, pressure and elevation

To assist designers in their pipe size and pressure class decision making, Iplex provides a web based Hydraulic Design Tool, which is free to use following registration at www.iplex.com.au.

4.2 Structural Design

In engineering terms, POLIplex® polyethylene pipes are considered to be flexible when buried with respect to surrounding embedment materials. Due to their comparatively thick walls, Iplex POLIplex® PE100 pipes are stiff when compared to other types of extruded thermoplastic piping. The Australian Standard for Buried Flexible Pipelines, AS/NZS 2566 details a comprehensive structural design process that considers embedment depth, pipe stiffness, native soil properties, embedment material, groundwater, hydraulic pressure both positive and negative, applied and traffic loads to predict long-term deflection, circumferential wall bending strain and safety with regard to buckling stability.

To assist designers in their pipe selection decision, Iplex provides a Structural Design Tool, which is free to download and use following registration at www.iplex.com.au.

5.0 Installation

5.1 Handling and storage

POLIplex® polyethylene pipes and fittings are light in weight and easy to handle compared to many other materials. They have considerable resilience, flexibility and resistance to impact. However pipes and fittings can be scored by sharp edges and can be distorted under load, particularly at higher temperatures. Therefore, in general, pipes and fittings should not be dropped, indented, crushed or impacted and should not be subjected to rough handling during loading and unloading operations.

Pipes and fittings must not be stored or transported adjacent to heat sources, such as engine exhausts, boilers, naked flames or hot water or steam lines. While polyethylene is very resistant to low temperatures, as the temperature drops below 0°C the impact resistance will slowly reduce, and therefore more care should be taken to avoid damage by impact. Care should be taken in handling pipes and fittings in wet or frosty conditions as they may become slippery.

As with all pipe materials, contact with oils, petrol, solvents or chemicals that might have an adverse affect on future performance should be avoided.

Typically, scores or scratches to a depth of more than 10% of the wall thickness should be avoided for pressure applications.

During coiling care should be taken to maintain the coil diameter at or above the specified minimum to prevent kinks. In uncoiling or recoiling care should be taken that sharp objects do not score the pipe.

Generally, only webbing slings should be used to lift polyethylene pipes by crane. Vacuum lifting may be used, but chains, wire ropes and hooks should be avoided.

Pipes of colour other than black should be protected from elevated temperatures and direct sunlight during storage and transport, particularly if they are to be stored for more than 2 years.

5.2 Lifting, handling, storage and transport of straight lengths

Lifting of individual pipes or packs up to 6m in length can be performed by a forklift. To prevent drooping of long packs or individual pipes and subsequent scuffing of pipe ends, two lifting points or spreader bars should be used for pipes or pipe packs exceeding 6 metres in length.

Appropriate personnel exclusion zones should apply when lifting pipes in order to avoid injury if the pipe slips.

Straight pipe lengths stacked for storage or transport should be continuously and evenly supported to minimise distortion.

Timber framed packs should be stacked with the frames close together and alternating evenly. Packs with widely differing frame spacing should not be stacked. Do not align the bearers vertically as the stacks are likely to be unstable.

In such load bearing stacks the maximum free height should be such that the pipe is not permanently deformed, having regard to sideways stability. For larger diameter pipes it may be necessary to brace the ends of the pipe with internal supports to prevent end distortion. Sharp sections bearing against the pipes should be avoided as these can cause indentations in, or scoring of, the pipe wall.

If different SDR's of pipe are kept in the same stacks then the lowest SDR (thickest wall) should always be at the bottom. Pipes may be nested inside each other for transport or storage provided distortion does not occur. When being transported, pipes should not be restrained in a manner likely to result in damage to them.

5.3 Lifting, handling, storage and transport of coils

Larger diameter coiled polyethylene pipes, for example those of diameters equal to or greater than 63mm can be very heavy and pose particular handling and storage risks. The consequences of coils falling or slipping should always be considered as serious injury can occur. This is particularly the case for coils stored in a vertical or near vertical position. For unloading heavier coils, delivery sites should be equipped with cranes or forklifts or crane-trucks should be used.

When lifting coils, slings must be placed around the entire coil. If coils are lifted by a fork truck, contact points must be protected and the lifting must be performed on the entire coil. Fork tines should not be inserted between windings in a coil.

Coiled pipe can be stored and transported by being laid flat on a continuous surface such as pallets but stored only to such a height that the bottom convolutions do not become distorted. Pipe coils can also be stored and transported in a near vertical position. Care must be exercised to ensure the support against which the coils are leant are strong enough to withstand the load. Care should also be taken to ensure the external loops of the vertically supported coil are not damaged or flattened in transport.

When releasing coils and uncoiling polyethylene pipe, it must be remembered that the coil is under tension and must be released in a controlled manner. The end of the coil should be restrained at all times, then the straps released steadily, one at a time. If the coil has bands at different layers of the coil, then they should be released sequentially starting from the outer layers. The amount of energy locked up in the coil will depend on the size of pipe, the class of the pipe, and the size of the coil. The amount of energy can be substantial and cause significant injury or damage if released in an uncontrolled manner. The person releasing the restraining straps should stand in a safe position at the side of the coil.

Typical ovality of pipes stored as coils can be resolved with the use of re-rounding equipment. Refer to page 98 for a list of equipment available.

5.4 Lifting, handling and transport of drums

Where drums are available they should be used to transport pipe because their radius bearing surface is designed to protect the pipe from indentations. The same stored energy is found in drums as with coils, except that the pipe is under more control when it is restrained on a drum. It is therefore only necessary to restrain the end of the pipe to make sure it is under control, and to see that the drum is restrained so that it cannot turn freely, and allow the pipe to unravel. Drums are very heavy and must not be manhandled, but must always be handled with the appropriate equipment.

Drums must be stored on flat, stable ground to make sure they will not topple over, and should be controlled, e.g. by the use of chocks, to ensure they do not roll out of position.

When lifting drums from the vehicle, they should be lifted by use of a strap placed under the plate carrying the pipe, and not through the outer rim of the drum, as this may bend the rim inwards and damage both the drum and the pipe.

If lifted by a fork, the tines should be fitted inside the drum under the cross members, making sure the length of the tine is sufficient to fit through the drum to support both sides.

Under no circumstances should a drum be allowed to drop from the back of a vehicle on to the ground, or even on to a stack of tyres or other buffer system. When lifting steel drums, care must be taken to make sure they do not come in contact with overhead wires.

5.5 Above ground POLIplex® pipe support spans as per AS/NZS 2033

Table 6 Maximum spacing of supports for fixed installation

Nominal outside diameter of pipe (mm)	Recommended maximum spacing of supports (metres)	
	Horizontal or graded pipes	Vertical pipes
16	0.25	0.50
20	0.30	0.60
25	0.35	0.70
32	0.38	0.75
40	0.43	0.85
50	0.45	0.90
63	0.50	1.05
75	0.60	1.20
90	0.67	1.35
125	0.75	1.50
140	0.85	1.70
160	1.00	2.00
200	1.10	2.20
225	1.15	2.30
250	1.25	2.50
280	1.30	2.60
≥355	1.50	3.00

Note: Design of support brackets for polyethylene pipes should include allowance for expansion and contraction. For more information please refer to AS/NZS 2033.

5.6 Polyethylene safe axial (pulling) loads

Table 7 Safe Axial (Pulling) Load kN

SDR	41	26	21	17	13.6	11	9	7.4
PN for PE100	4	6.3	8	10	12.5	16	20	25
DN50	-	-	2.8	3.5	4.3	5.2	6.2	7.3
DN63	-	3.7	4.5	5.5	6.8	8.2	9.9	11.7
DN75	-	5.2	6.4	7.8	9.6	11.7	14.0	16.5
DN90	-	7.5	9.2	11.3	13.9	16.8	20.1	23.8
DN110	7.2	11.2	13.8	16.8	20.7	25.1	30.0	35.5
DN125	9.3	14.5	17.8	21.7	26.8	32.5	38.8	45.9
DN140	11.7	18.2	22.3	27.3	33.6	40.7	48.7	57.6
DN160	15.3	23.8	29.2	35.6	43.8	53.2	63.5	75.2
DN180	19.4	30.1	36.9	45.1	55.5	67.3	80.4	95.2
DN200	23.9	37.2	45.6	55.7	68.5	83.1	99.3	117.5
DN225	30.3	47.1	57.7	70.4	86.7	105.2	125.7	148.7
DN250	37.4	58.1	71.2	87.0	107.0	129.8	155.1	183.6
DN280	46.9	72.9	89.4	109.1	134.2	162.8	194.6	230.3
DN315	59.3	92.2	113.1	138.1	169.9	206.1	246.3	291.5
DN355	75.4	117.1	143.6	175.4	215.8	261.8	312.8	370.2
DN400	95.7	148.7	182.4	222.6	273.9	332.3	397.2	470.0
DN450	121.1	188.2	230.8	281.8	346.7	420.6	502.7	594.8
DN500	149.5	232.4	285.0	347.9	428.0	519.3	620.6	-
DN560	187.5	291.5	357.4	436.4	536.9	651.4	778.4	-
DN630	237.4	368.9	452.4	552.3	679.5	824.4	985.2	-
DN710	301.5	468.5	574.6	701.4	863.1	1047.1	1251.3	-
DN800	382.7	594.9	729.5	890.5	1095.8	1329.3	1588.6	-
DN900	484.4	752.9	923.2	1127.1	1386.8	1682.4	-	-
DN1000	598.0	929.5	1139.8	1391.4	1712.1	2077.1	-	-

6.0 Iplex Product Codes

The product computer identification codes used by Iplex for POLIplex® pipe generally take the sequence of Product Type, Pressure Class, Diameter and Length as per the example below:

PBH122550
PE100 Blueline PN12.5 DN25 50m coil

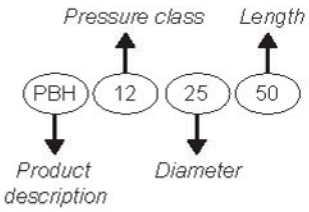

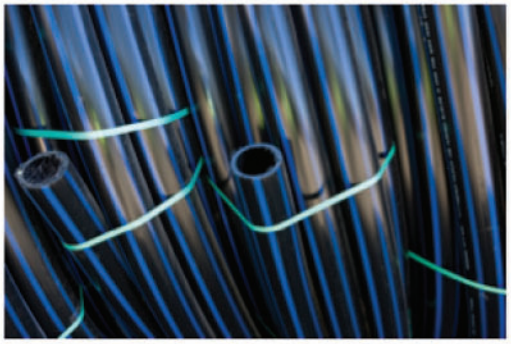

The tables below outline some of the available product code types, pressure class, diameter and lengths. For more information please contact an Iplex Representative.

Product type

Product description	Product code
PE100 POLIplex® Black	POH
PE100 POLIplex® Blueline	PBH
PE100 POLIplex® Purple Stripe	PLH
PE100 POLIplex® Cream Stripe	PCH
PE100 POLIplex® Blue	PABH
PE100 THERMAPIPE® White Coex	PHX
PE100 Blue Coex	PHXB
PE100 Purple Coex	PHXL
PE100 POLIplex® Gas	PYLH
Economy Rural Greenline*	PICH
¹Redline Rural*	PICR

Note: No pressure rating on these codes.*
¹ Only available in Western Australia.*

Pressure class and diameter @ 20°C

Pressure class	
PN	Code
6.3	06
8	08
10	10
12.5	12
16	16
20	20

Diameter	
DN	Code
16	16
20	20
25	25
32	32
40	40
50	50
63	63
75	75
90	90
110	110
125	125
140	140
160	160
180	180
etc...	etc...
2000	2000

Length (Coils and straight lengths)

Coils	
Meters	Code
25	25
50	50
100	100
150	150
200	200

Straight	
Meters	Code
6	F
12	M
15	Q
20	QE

Frequently Asked Questions

The following is a sample of commonly asked questions pertaining to POLIplex® pipe and fittings. Should additional information be required, please refer to our website www.iplex.com.au or contact Iplex Pipelines.

Are POLIplex® pipes resistant to ultra violet radiation?

Yes, POLIplex® pipes contain either carbon black or chemical stabilisers to protect them from the effects of ultra violet radiation. Black pipes are suitable for long-term external exposure to sunlight. Coloured pipe may be stored for up to 2-years in direct sunlight. For long-term exposure in above ground applications, Iplex recommends the use of white THERMAPIPE®.

Do I need thrust blocks or other forms of restraint on POLIplex® pipelines?

Generally no, as POLIplex® pipes are fully welded or mechanically restrained, however it may be necessary to provide thrust restraint where POLIplex® pipelines connect to rubber ring jointed pipelines or other non restrained pipe or fittings. For more information, contact Iplex Pipelines.

How do I pressure test POLIplex® pipelines?

Polyethylene pipes require a different test procedure to PVC or ductile iron pipelines to compensate for the materials tendency to strain during pressure testing. If the correct test procedure is not used, the pipeline may appear to fail the test. Detailed information on the correct procedure is contained in Australian Standard AS/NZS 2033.

Can I use POLIplex® pipes to convey compressed air?

Yes, however they require rerating due to its elevated temperature and the stored energy contained in compressed air. Information is available in PIPA Industry Guideline POP002 "Polyethylene (PE) Pipes and Fittings for Compressed Air", which can be accessed at www.pipa.com.au.

What is the maximum temperature at which POLIplex® pipe can be used?

At temperature above 25°C, polyethylene pipes require pressure rerating. At very high temperatures as well as very low temperatures, the life of polyethylene pipes may be substantially reduced. For detailed information, refer to PIPA Industry Guideline POP013 "Temperature rerating of PE pipes", which can be accessed at www.pipa.com.au.

Are POLIplex® pipes affected by chemicals?

Whilst polyethylene is a highly chemical resistant material, there are some chemicals which are unsuitable for carriage in POLIplex® pipes, or may reduce their service life. For detailed information on most chemicals, refer to the Iplex Chemical Resistance Tool at www.iplex.com.au .

Do I need any special training to conduct butt-fusion or electrofusion welding?

Yes. Welding by untrained operators is the most common cause of joint failure in polyethylene pipelines. Australian Standard AS/NZS 2033 stipulates that polyethylene welders must be trained and certified by a Registered Training Organisation and that welding procedures must be in accordance with PIPA Industry Guidelines POP001 "Electrofusion Jointing of PE pipe and fittings for pressure applications" and/or POP003 "Butt Fusion Jointing of PE pipes and fittings - recommended parameters". More information can be accessed at www.pipa.com.au .

Frequently Asked Questions - Continued...

How do I store electrofusion fittings?

Fittings should be stored out of the direct sunlight and in their original boxes and sealed plastic bags until immediately before use. Ideally, couplings should be stored on their flat ends.

Can I use an electrofusion fitting which has been removed from its original plastic bag?

Contamination is the most prevalent cause of failure of electrofusion fittings. Failure to preserve the manufacturer's packaging of fittings increases the risk of UV oxidisation or surface contamination possibly rendering the fitting useless or unsaleable.

What can I use to clean electrofusion fittings prior to welding?

Iplex Pipelines stock cleaning wipes that are ideal for installation preparation. Methylated spirits contain residual oils that will contaminate the welding surface and should not be used.

How do I weld coiled pipe that has become oval?

Coiled pipe will become oval due to the stress induced during coiling and must be rerounded using the correct tools prior to welding. Iplex stock a variety of rerounding equipment suitable for this purpose (Refer to page 100 for a list of available rerounding equipment).

What is the difference between SDR and PN ratings?

SDR is the Standard Dimensional Ratio of the pipe outside diameter to wall thickness. PN ratings are the nominal pressure rating of the pipe, but only at when it is carrying non-viscous fluids at 20°C. SDR is the preferred method for specifying the grade of pipe required.

What is the expected life of POLIplex® pipelines?

There are many factors that may affect the life of polyethylene pipelines. They include temperature, fluid type, installation method, UV exposure and cyclic loading. When correctly installed in underground applications, POLIplex® pipes conveying water will have an anticipated service of in excess of 100 years.

+GF+ ELGEF Couplings

PE100 SDR11:

Iplex code	Typical dimensions	
	Nominal diameter DN (mm)	Dim. (mm) L
EG0720	20	70
EG0725	25	70
EG0732	32	72
EG0740	40	80
EG0750	50	88
EG0763	63	96

Note: Comes with integral clamps for restraint whilst welding.

Iplex code	Typical dimensions	
	Nominal diameter DN (mm)	Dim. (mm) L
EG0775	75	110
EG0790	90	125
EG07110	110	145
EG07125	125	156
EG07140	140	166
EG07160	160	180
EG07180	180	192
EG07200	200	208
EG07225	225	225
EG07250	250	248
EG07280	280	252
EG07315	315	267
EG07355	355	290
EG07400	400	290
EG07450	450	320
EG07500*	500	360
EG07560*	560	390
EG07630*	630	430
EG07710*	710	475
EG07800*	800	550

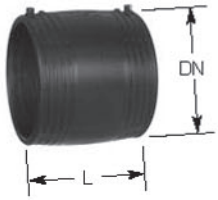

**Where +GF+ EF couplings are not available other brands may be substituted.*

Note:

- All dimensions, masses & volumes are approximate only. If critical contact Iplex Pipelines.

+GF+ ELGEF Couplings

PE100 SDR17:

Iplex code	Typical dimensions	
	Nominal diameter DN (mm)	Dim. (mm) L
EG0710160	160	180
EG0710180	180	192
EG0710200	200	206
EG0710225	225	225
EG0710250	250	248
EGO710280	280	252
EG0710315	315	267
EG0710355	355	290
EG0710400	400	290
EG0710450	450	313
EG0710500	500	343

Iplex code	Typical dimensions	
	Nominal diameter DN (mm)	Dim. (mm) L
EG0710560*	560	392
EG0710630*	630	442
EG0710710*	710	475
EG0710800*	800	520
EG0710900*	900	550
EG07101000*	1000	600
EG07101200*	1200	650

** Installation only with Pressure Pad Kit. Contact Georg Fischer for hire rates.*

+GF+ ELGEF Elbows

Elbows 90° PE100 SDR11:

Iplex code	Typical dimensions	
	Nominal diameter DN (mm)	Dim. (mm) L
EG102090	20	54
EG102590	25	54
EG103290	32	53
EG104090	40	62
EG105090	50	71
EG106390	63	81

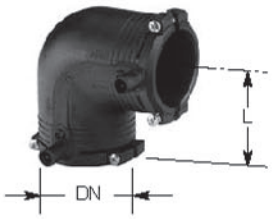

Note: Comes with integral clamps for restraint whilst welding.

Note:

- All dimensions, masses & volumes are approximate only. If critical contact Iplex Pipelines.

+GF+ ELGEF Elbows

Elbows 90° PE100 SDR11:

Iplex code	Typical dimensions	
	Nominal diameter DN (mm)	Dim. (mm) L
EG107590	75	94
EG109090	90	122
EG1011090	110	147
EG1012590	125	142
EG1016090	160	193
EG1018090	180	213

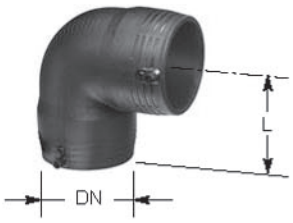

Iplex code	Typical dimensions	
	Nominal diameter DN (mm)	Dim. (mm) L
EG1020090	200	298
EG1022590	225	318
EG1025090	250	347

Elbows 45° PE100 SDR11:

Iplex code	Typical dimensions	
	Nominal diameter DN (mm)	Dim. (mm) L
EG103245	32	44
EG104045	40	50
EG105045	50	56
EG106345	63	63

Iplex code	Typical dimensions	
	Nominal diameter DN (mm)	Dim. (mm) L
EG107545	75	71
EG109045	90	91
EG1011045	110	112
EG1012545	125	127
EG1016045	160	134
EG1018045	180	142

Iplex code	Typical dimensions	
	Nominal diameter DN (mm)	Dim. (mm) L
EG1020045	200	232
EG1022545	225	247
EG1025045	250	275

Note:

- All dimensions, masses & volumes are approximate only. If critical contact Iplex Pipelines.

+GF+ ELGEF Tees

Tees 90° - Equal PE100 SDR11:

Iplex code	Typical dimensions		
	Nominal diameter DN (mm)	Dim. (mm) L	Dim. (mm) L1
EG1920	20	88	92
EG1925	25	90	92
EG1932	32	102	100
EG1940	40	119	114
EG1950	50	135	126
EG1963	63	151	150

Iplex code	Typical dimensions		
	Nominal diameter DN (mm)	Dim. (mm) L	Dim. (mm) L1
EG1975	75	178	143
EG1990	90	205	161
EG19110	110	255	184
EG19125	125	276	207
EG19160	160	330	220
EG19180	180	350	247

Iplex code	Typical dimensions		
	Nominal diameter DN (mm)	Dim. (mm) L	Dim. (mm) L1
EG19200	200	590	250
EG19225	225	636	270
EG19250	250	685	288

Note:

- All dimensions, masses & volumes are approximate only. If critical contact Iplex Pipelines.

+GF+ ELGEF Tees

Tees 90° - Reducing PE100 SDR11:

Iplex code	Typical dimensions			
	Nominal diameter DN1 (mm)	Nominal diameter DN2 (mm)	Dim. (mm) L	Dim. (mm) L1
EG1916063	160	63	433	90
EG1916090	160	90	496	90
EG19160110	160	110	496	90
EG1920090	200	90	596	104
EG19200110	200	110	596	104
EG19200160	200	160	596	104
EG1922590	225	90	658	112
EG19225110	225	110	658	112
EG19225160	225	160	658	112
EG19250110	250	110	685	123
EG19250160	250	160	685	123

Note:

- All dimensions, masses & volumes are approximate only. If critical contact Iplex Pipelines.

+GF+ ELGEF Reducers

Reducers PE100 SDR 11:

Iplex code	Typical dimensions		
	Nominal diameter DN1 (mm)	Nominal diameter DN2 (mm)	Dim. (mm) L
EG082520	25	20	74
EG083220	32	20	79
EG083225	32	25	79
EG084020	40	20	88
EG084025	40	25	88
EG084032	40	32	88
EG085032	50	32	96
EG085040	50	40	96
EG086332	63	32	105
EG086340	63	40	105
EG086350	63	50	105

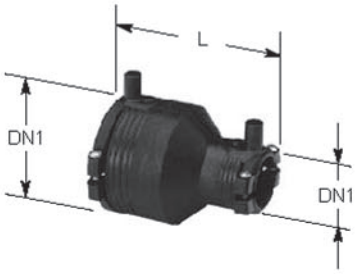

Iplex code	Typical dimensions		
	Nominal diameter DN1 (mm)	Nominal diameter DN2 (mm)	Dim. (mm) L
EG089063	90	63	146
EG0811090	110	90	173
EG0812590	125	90	180
EG08160110	160	110	226
EG08180125	180	125	247
EG08200160	200	160	365
EG08225160	225	160	385
EG08250160	250	160	400
EG08250200	250	200	427

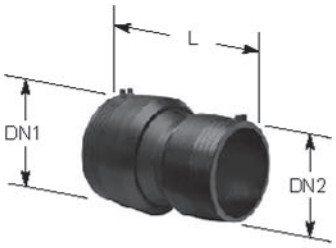

Reducers (Kit) PE100 SDR 11:

Iplex code	Typical dimensions		
	Nominal diameter DN1 (mm)	Nominal diameter DN2 (mm)	Dim. (mm) L
EG087540KIT	75	40	265
EG087550KIT	75	50	269
EG087563KIT	75	63	273
EG089050KIT	90	50	297
EG089075KIT	90	75	308
EG0811063	110	63	326
EG0811075	110	75	333
EG0812563	125	63	314
EG08125110	125	110	367
EG0816090	160	90	370
EG08160125	160	125	414
EG08180110	180	110	413

Note:

- All dimensions, masses & volumes are approximate only. If critical contact Iplex Pipelines.

+GF+ ELGEF End Caps

End Caps PE100 SDR11:

Iplex code	Typical dimensions	
	Nominal diameter DN (mm)	Dim. (mm) L
EG0620	20	52
EG0625	25	52
EG0632	32	52
EG0640	40	56
EG0650	50	60
EG0663	63	66

Iplex code	Typical dimensions	
	Nominal diameter DN (mm)	Dim. (mm) L
EG06160	160	143
EG06200	200	162
EG06225	225	170
EG06250	250	185

End Caps (Kit) PE100 SDR11:

Iplex code	Typical dimensions	
	Nominal diameter DN (mm)	Dim. (mm) L
EG0675*	75	110
EG0690*	90	125
EG06110	110	145
EG06125	125	158
EG06140	140	170
EG06180	180	194

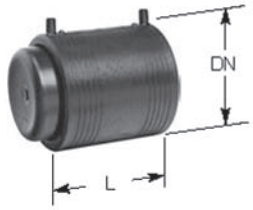

** Item may be supplied as long spigot end cap plus EF Coupling*

Note:

- All dimensions, masses & volumes are approximate only. If critical contact Iplex Pipelines.

+GF+ ELGEF Plus Branch Saddles

Electrofusion Branch Saddles PE100 SDR11:

Iplex code	Typical dimensions		
	Nominal diameter DN1 (mm)	Nominal diameter DN2 (mm)	Dim. (mm) L
EG5106363	63	63	165
EG5107563	75	63	165
EG5109063	90	63	165
EG5111063	110	63	182
EG5112563	125	63	165
EG5114063	140	63	165
EG5116063	160	63	182
EG5118063	180	63	165
EG5120063	200	63	165
EG5122563	225	63	165
EG5125063	250	63	165
EG5128063*	280	63	165
EG5131563*	315-355	63	165

** Installation of this range of saddles requires the use of Topload tool (EG799350477), detailed instructions and specific training.*

** In this fitting range, no underpart is supplied.*

Saddles Branch Fitting PE100 SDR11:

Iplex code	Typical dimensions		
	Nominal diameter DN1 (mm)	Nominal diameter DN2 (mm)	Dim. (mm) L
EG5111090	110	90	164
EG51110110	110	110	164
EG5112590	125	90	179
EG51125110	125	110	179
EG5114090	140	90	195
EG51140110	140	110	195
EG5116090	160	90	215
EG51160110	160	110	215
EG51160125	160	125	215
EG5118090	180	90	237
EG51180110	180	110	237
EG51180125	180	125	237
EG5120090	200	90	253
EG51200110	200	110	253
EG51200125	200	125	253
EG5122590	225	90	287
EG51225110	225	110	287
EG51225125	225	125	287
EG5125090	250	90	312
EG51250110	250	110	312
EG51250125	250	125	312

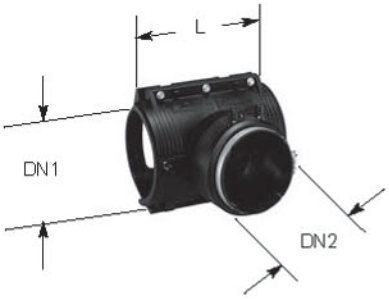

** Installation of this range of saddles requires the use of Topload tool (EG799350477), detailed instructions and specific training.*

Note:

- All dimensions, masses & volumes are approximate only. If critical contact Iplex Pipelines.

+GF+ ELGEF Plus Branch Saddles

Branch Fitting Toplload PE100 SDR11:

Iplex code	Typical dimensions		
	Nominal diameter DN1 (mm)	Nominal diameter DN2 (mm)	Dim. (mm) L
EG5128090	280	90	243
EG51280110	280	110	243
EG51280125	280	125	243
EG5135590	315-355	90	249
EG51355110	315-355	110	249
EG51355125	315-355	125	249
EG5140090	400-450	90	256
EG51400110	400-450	110	256
EG51400125	400-450	125	256
EG5150090	500-630	90	263
EG51500110	500-630	110	263
EG51500125	500-630	125	263

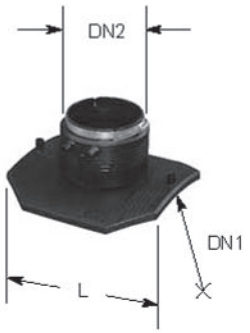

Note : Installation of this range of saddles requires the use of Topload tool (EG799350477), detailed instructions and specific training.

Tapping Tees PE100 SDR11:

Iplex code	Typical dimensions		
	Nominal diameter DN1 (mm)	Nominal diameter DN2 (mm)	Dim. (mm) L
EG536320	63	20	130
EG536325	63	25	130
EG536332	63	32	130
EG536340	63	40	137
EG536363	63	63	160

Note: Suitable for branch saddles shown above. Both units combine to become a multi-directional EF tapping saddle.

Note:
- All dimensions, masses & volumes are approximate only. If critical contact Iplex Pipelines.

+GF+ ELGEF Tapping Saddles

Tapping Saddles Monobloc Version PE100 SDR11:

Iplex code	Typical dimensions		
	Nominal diameter DN1 (mm)	Nominal diameter DN2 (mm)	Dim. (mm) L
EG553220*	32	20	90
EG554020	40	20	102
EG554025	40	25	102
EG554032	40	32	120
EG555020	50	20	102
EG555025	50	25	102
EG555032	50	32	120

** Delivery without underpart.*

Iplex code	Typical dimensions		
	Nominal diameter DN1 (mm)	Nominal diameter DN2 (mm)	Dim. (mm) L
EG556320	63	20	110
EG556325	63	25	110
EG556332	63	32	110
EG559020	90	20	115
EG559025	90	25	115
EG559032	90	32	115
EG5511020	110	20	115
EG5511025	110	25	115
EG5511032	110	32	125
EG5511063	110	63	160
EG5512520	125	20	120
EG5512525	125	25	120
EG5512532	125	32	120
EG5516020	160	20	120
EG5516025	160	25	125
EG5516032	160	32	130
EG5516063	160	63	170

Note:
- All dimensions, masses & volumes are approximate only. If critical contact Iplex Pipelines.

+GF+ ELGEF Tapping Saddles

Tapping Saddles with 360° Rotatable Outlet PE100 SDR11:

Iplex code	Typical dimensions		
	Nominal diameter DN1 (mm)	Nominal diameter DN2 (mm)	Dim. (mm) L
EG506320	63	20	130
EG506325	63	25	130
EG506332	63	32	130
EG506340	63	40	137
EG506363	63	63	160
EG507520	75	20	130
EG507525	75	25	130
EG507532	75	32	130
EG507540	75	40	137
EG507563	75	63	160
EG509020	90	20	130
EG509025	90	25	130
EG509032	90	32	130
EG509040	90	40	137
EG509063	90	63	160
EG5011020	110	20	130
EG5011025	110	25	130
EG5011032	110	32	130
EG5011040	110	40	137
EG5011063	110	63	160
EG5012520	125	20	130
EG5012525	125	25	130
EG5012532	125	32	130
EG5012540	125	40	137
EG5012563	125	63	160
EG5014020	140	20	130
EG5014025	140	25	130
EG5014032	140	32	130

Iplex code	Typical dimensions		
	Nominal diameter DN1 (mm)	Nominal diameter DN2 (mm)	Dim. (mm) L
EG5014040	140	40	137
EG5014063	140	63	160
EG5016020	160	20	130
EG5016025	160	25	130
EG5016032	160	32	130
EG5016040	160	40	137
EG5016063	160	63	160
EG5018020	180	20	130
EG5018025	180	25	130
EG5018032	180	32	130
EG5018040	180	40	137
EG5018063	180	63	160
EG5020020	200	20	137
EG5020025	200	25	130
EG5020032	200	32	130
EG5020040	200	40	137
EG5020063	200	63	160
EG5022520	225	20	130
EG5022525	225	25	130
EG5022532	225	32	130
EG5022540	225	40	137
EG5022563	225	63	160
EG5025020	250	20	130
EG5025025	250	25	130
EG5025032	250	32	130
EG5025040	250	40	137
EG5025063	250	63	160
EG5028063*	280	63	160
EG5031563*	315-400	63	160

** Installation of this range of saddles requires the use of Topload tool (EG799350477), detailed instructions and specific training.*

** In this fitting range, no underpart is supplied.*

Note:
- All dimensions, masses & volumes are approximate only. If critical contact Iplex Pipelines.

+GF+ ELGEF Transition Adaptors

Transition Adaptors PE/Brass (Male Thread):

Iplex code	Typical dimensions		
	Nominal diameter DN1 (mm)	Dim. (inch) R	Dim. (mm) L
PEAMI020015	20	½	110
PEAMI025020	25	¾	111
PEAMI032025	32	1	117
PEAMI032032	32	1 ¼	135
PEAMI032040	32	1 ½	143
PEAMI040025	40	1	133
PEAMI040032	40	1 ¼	127
PEAMI040040	40	1 ½	143
PEAMI050025	50	1	141
PEAMI050032	50	1 ¼	143
PEAMI050040	50	1 ½	135
PEAMI063032	63	1 ¼	153
PEAMI063040	63	1 ½	153
PEAMI063050	63	2	147

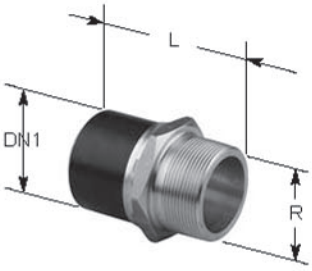

Note: EF Coupling is required (EG07) for electrofusion to pipe.

Transition Adaptors PE/Stainless Steel (Male Thread):

Iplex code	Typical dimensions		
	Nominal diameter DN1 (mm)	Dim. (inch) R	Dim. (mm) L
PEAMI020015SS	20	½	110
PEAMI025020SS	25	¾	111
PEAMI032025SS	32	1	117
PEAMI032032SS	32	1 ½	117
PEAMI040032SS	40	1 ¼	127
PEAMI040040SS	40	1 ½	143
PEAMI050040SS	50	1 ½	135
PEAMI063040SS	63	1 ½	147
PEAMI063050SS	63	2	147

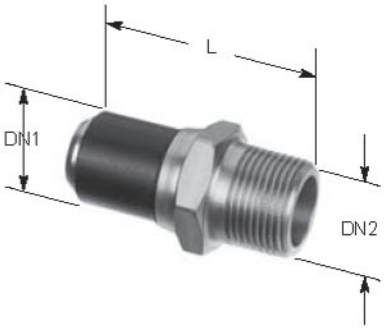

Note: EF Coupling is required (EG07) for electrofusion to pipe.

Transition Adaptors PE/Brass (Female Thread):

Iplex code	Typical dimensions		
	Nominal diameter DN1 (mm)	Dim. (inch) R	Dim. (mm) L
PEAFI032025	32	1	108
PEAFI040032	40	1 ¼	118
PEAFI050040	50	1 ½	126
PEAFI063025	63	1	138
PEAFI063032	63	1 ¼	138
PEAFI063040	63	1 ½	138
PEAFI063050	63	2	138

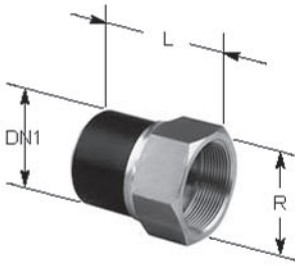

Note: EF Coupling is required (EG07) for electrofusion to pipe.

Note:

- All dimensions, masses & volumes are approximate only. If critical contact Iplex Pipelines.

+GF+ ELGEF Transition Adaptors

Transition Adaptors PE/Stainless Steel (Female Thread):

Iplex code	Typical dimensions		
	Nominal diameter DN1 (mm)	Dim. (inch) R	Dim. (mm) L
PEAFI020015SS	20	½	100
PEAFI025020SS	25	¾	101
PEAFI032025SS	32	1	108
PEAFI040032SS	40	1 ¼	118
PEAFI050040SS	50	1 ¼	126
PEAFI063050SS	63	2	138

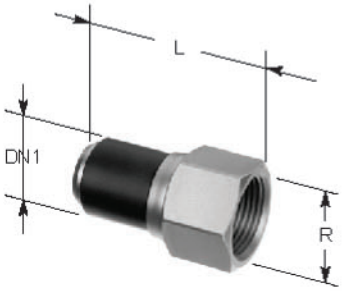

Note: EF Coupling is required (EG07) for electrofusion to pipe.

Note:

- All dimensions, masses & volumes are approximate only. If critical contact Iplex Pipelines.

Stub Flanges (Suitable for Butt Welding only):

PE100 SDR17:

Iplex code	Typical dimensions				
	Nominal diameter DN (mm)	Dim. (mm) D1	Dim. (mm) D2	Dim. (mm) L	Dim. (mm) L1
PEST17063	63	75	95	50	15
PEST17075	75	88	108	50	15
PEST17090	90	103	129	80	17
PEST17110	110	124	158	80	18
PEST17125	125	128	158	80	25
PEST17140	140	151	187	80	25
PEST17160	160	168	213	80	25
PEST17180	180	190	213	80	30
PEST17200	200	225	270	95	30
PEST17225	225	230	270	95	30
PEST17250	250	284	322	100	35
PEST17280	280	294	334	100	35
PEST17315	315	335	380	105	35
PEST17355	355	366	442	110	40
PEST17400	400	420	495	110	45
PEST17450	450	470	545	110	45
PEST17500	500	520	596	125	60
PEST17560	560	580	657	125	60
PEST17630	630	650	710	130	60
PEST17710	710	735	800	130	60
PEST17800	800	825	940	130	60
PEST17900	900	940	1050	130	60
PEST171000	1000	1025	1125	130	60
PEST171200	1200	1230	1330	170	80

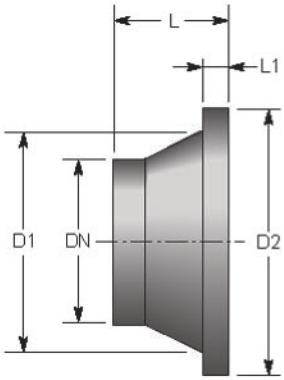

PE100 SDR11:

Iplex code	Typical dimensions				
	Nominal diameter DN (mm)	Dim. (mm) D1	Dim. (mm) D2	Dim. (mm) L	Dim. (mm) L1
PEST11063	63	75	95	50	15
PEST11075	75	88	108	50	15
PEST11090	90	103	129	80	17
PEST11110	110	124	158	80	18
PEST11125	125	128	158	80	25
PEST11140	140	151	187	80	25
PEST11160	160	168	213	80	25
PEST11180	180	190	213	80	30
PEST11200	200	225	270	95	30
PEST11225	225	230	270	95	30
PEST11250	250	284	322	100	35
PEST11280	280	294	334	100	35
PEST11315	315	335	380	105	35
PEST11355	355	366	442	110	40
PEST11400	400	420	495	110	45
PEST11450	450	470	545	110	45
PEST11500	500	520	596	125	60
PEST11560	560	580	657	125	60
PEST11630	630	650	710	130	60
PEST11710	710	735	800	130	60
PEST11800	800	825	940	130	60
PEST11900	900	940	1050	130	60
PEST111000	1000	1025	1125	130	60
PEST111200	1200	1230	1330	170	80

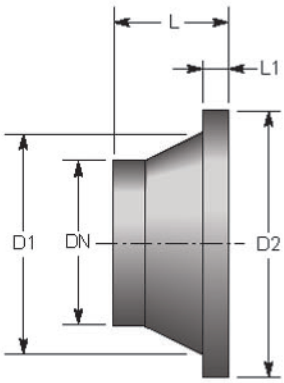

Note:

- Multiple suppliers products can be stocked, all dimensions, masses & volumes are approximate only. If critical contact Iplex Pipelines.
- Other sizes and SDR's are available and can be made to order, subject to minimum order quantities.

Long Spigot Stub Flanges (Suitable for Electrofusion and Butt Welding)

PE100 SDR17:

Iplex code	Typical dimensions				
	Nominal diameter DN (mm)	Dim. (mm) D1	Dim. (mm) D2	Dim. (mm) L	Dim. (mm) L1
PEST17020LS	20	27	45	85	7
PEST17025LS	25	33	58	85	9
PEST17032LS	32	40	68	85	10
PEST17040LS	40	50	78	85	11
PEST17050LS	50	61	88	104	12
PEST17063LS	63	75	102	98	14
PEST17075LS	75	89	122	125	16
PEST17090LS	90	105	138	140	17
PEST17110LS	110	125	158	160	18
PEST17125LS	125	132	158	170	25
PEST17140LS	140	155	188	200	25
PEST17160LS	160	175	212	200	25
PEST17180LS	180	180	212	200	30
PEST17200LS	200	232	268	200	32
PEST17225LS	225	235	268	200	32
PEST17250LS	250	285	320	219	35
PEST17280LS	280	291	320	231	35
PEST17315LS	315	335	370	239	35
PEST17355LS	355	373	430	260	40
PEST17400LS	400	427	482	290	46
PEST17450LS	450	514	545	333	46
PEST17500LS	500	530	596	350	60
PEST17560LS	560	615	657	365	60
PEST17630LS	630	642	710	385	60
PEST17710LS	710	737	800	400	60
PEST17800LS	800	840	940	400	65

Note: EF Coupling (EG70) required for electrofusion

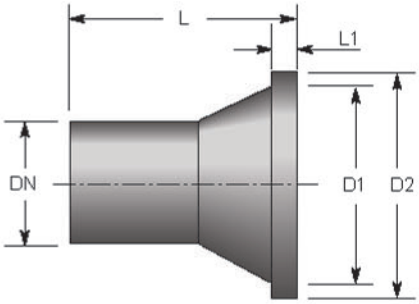

PE100 SDR11:

Iplex code	Typical dimensions				
	Nominal diameter DN (mm)	Dim. (mm D1	Dim. (mm) D2	Dim. (mm) L	Dim. (mm) L1
PEST11020LS	20	27	45	85	7
PEST11025LS	25	33	58	85	9
PEST11032LS	32	40	68	85	10
PEST11040LS	40	50	78	85	11
PEST11050LS	50	61	88	104	12
PEST11063LS	63	75	102	98	14
PEST11075LS	75	89	122	125	16
PEST11090LS	90	105	138	140	17
PEST11110LS	110	125	158	160	18
PEST11125LS	125	132	158	170	25
PEST11140LS	140	155	188	200	25
PEST11160LS	160	175	212	200	25
PEST11180LS	180	180	212	200	30
PEST11200LS	200	232	268	200	32
PEST11225LS	225	235	268	200	32
PEST11250LS	250	285	320	219	35
PEST11280LS	280	291	320	231	35
PEST11315LS	315	335	370	239	35
PEST11355LS	355	373	430	260	40
PEST11400LS	400	427	482	290	46
PEST11450LS	450	514	545	333	46
PEST11500LS	500	530	596	350	60
PEST11560LS	560	615	657	365	60
PEST11630LS	630	642	710	385	60
PEST11710LS	710	737	800	400	60
PEST11800LS	800	840	940	400	65

Note: EF Coupling (EG70) required for electrofusion

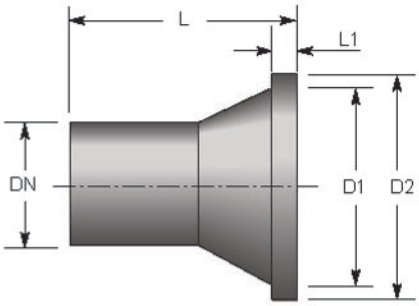

Note:

- Multiple suppliers products can be stocked, all dimensions, masses & volumes are approximate only. If critical contact Iplex Pipelines.
- Other sizes and SDR's are available and can be made to order, subject to minimum order quantities.

Backing Rings

Galvanised Steel - Table D (In accordance with AS 2129):

Iplex code	Typical dimensions							
	Nominal diameter DN (mm)	Flange size (mm)	Dim. (mm) PCD	Dim.OD (mm) L1	Dim.ID (mm) L2	Dim. (mm) L3	Bolt holes No. x Dia	Bolt size
PEBRDE020	20	-	67	95	32	6	4x14	M12
PEBRDE025	25	-	73	100	37	6	4x14	M12
PEBRDE032	32	-	83	115	44	7	4x14	M12
PEBRDE040	40	-	87	120	52	8	4x14	M12
PEBRDE050	50	40	98	135	62	9	4x14	M12
PEBRDE063	63	50	114	150	78	10	4x18	M16
PEBRDE075	75	65	127	165	92	10	4x18	M16
PEBRDE090	90	80	146	185	108	10	4x18	M16
PEBRD110	110	100	178	215	128	10	4x18	M16
PEBRD125100	125	100	178	215	140	10	4x18	M16
PEBRD125	125	125	210	255	140	13	8x18	M16
PEBRD140	140	125	210	255	158	13	8x18	M16
PEBRD160	160	150	235	280	178	13	8x18	M16
PEBRD180	180	150	235	280	195	13	8x18	M16
PEBRD200	200	200	292	335	235	13	8x18	M16
PEBRD225	225	200	292	335	240	13	8X18	M16
PEBRD250	250	250	356	405	290	16	8x22	M20
PEBRD280	280	250	356	405	300	16	8x22	M20
PEBRD315	315	300	406	455	345	19	12x22	M20
PEBRD355	355	350	470	525	376	22	12x26	M24
PEBRD400	400	400	521	580	430	22	12x26	M24
PEBRD450	450	450	584	640	480	25	12x26	M24
PEBRD500	500	500	641	705	533	29	16x26	M24
PEBRD560	560	550	699	760	590	29	16x30	M27
PEBRD630	630	600	756	825	660	32	16x30	M27
PEBRD710	710	700	845	910	745	35	20x30	M27
PEBRD800	800	800	984	1060	835	41	20x36	M33
PEBRD900	900	900	1092	1175	950	48	24x36	M33
PEBRD1000	1000	1000	1175	1255	1035	51	24x36	M33
PEBRD1200	1200	1200	1410	1490	1240	60	32x36	M33
PEBRD1400*	1400	1400	1615	1700	1460	60	36x36	M33
PEBRD1600*	1600	1600	1825	1910	1660	64	40x39	M36
PEBRD1800*	1800	1800	2019	2110	1860	73	44x42	M39
PEBRD2000*	2000	2000	2250	2345	2060	76	44x42	M39

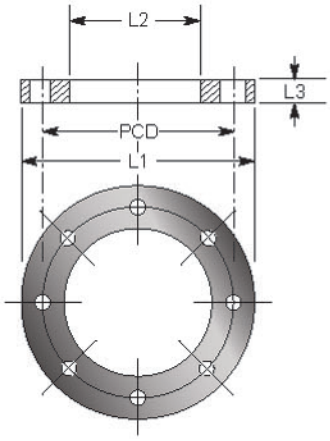

** Made to order products. Please contact an Iplex representative for more information.*
Note: Blind Flanges can be supplied upon request.

Note:
- Multiple suppliers products can be stocked, all dimensions, masses & volumes are approximate only. If critical contact Iplex Pipelines.

Backing Rings

Stainless Steel - Table D (In accordance with AS 2129):

Iplex code	Typical dimensions							
	Nominal diameter DN (mm)	Flange size (mm)	Dim. (mm) PCD	Dim.OD (mm) L1	Dim.DD (mm) L2	Dim. (mm) L3	Bolt holes No. x Dia	Bolt size
PEBRDE020SS	20	-	67	95	32	6	4x14	M12
PEBRDE025SS	25	-	73	100	37	6	4x14	M12
PEBRDE032SS	32	-	83	115	44	7	4x14	M12
PEBRDE040SS	40	-	87	120	52	8	4x14	M12
PEBRDE050SS	50	40	98	135	62	9	4x14	M12
PEBRDE063SS	63	50	114	150	78	10	4x18	M16
PEBRDE075SS	75	65	127	165	92	10	4x18	M16
PEBRDE090SS	90	80	146	185	108	10	4x18	M16
PEBRD110SS	110	100	178	215	128	10	4x18	M16
PEBRD125100SS	125	100	178	215	140	13	8x18	M16
PEBRD125SS	125	125	210	255	140	10	4x18	M16
PEBRD140SS	140	125	210	255	158	13	8x18	M16
PEBRD160SS	160	150	235	280	178	13	8x18	M16
PEBRD180SS	180	150	235	280	195	13	8x18	M16
PEBRD200SS	200	200	292	335	235	13	8x18	M16
PEBRD225SS	225	200	292	335	240	13	8X18	M16
PEBRD250SS	250	250	356	405	290	16	8x22	M20
PEBRD280SS	280	250	356	405	300	16	8x22	M20
PEBRD315SS	315	300	406	455	345	19	12x22	M20
PEBRD355SS	355	350	470	525	376	22	12x26	M24
PEBRD400SS	400	400	521	580	430	22	12x26	M24
PEBRD450SS	450	450	584	640	480	25	12x26	M24
PEBRD500SS*	500	500	641	705	533	29	16x26	M24
PEBRD560SS*	560	550	699	760	590	29	16x30	M27
PEBRD630SS*	630	600	756	825	660	32	16x30	M27
PEBRD710SS*	710	700	845	910	745	35	20x30	M27
PEBRD800SS*	800	800	984	1060	835	41	20x36	M33
PEBRD900SS*	900	900	1092	1175	950	48	24x36	M33
PEBRD1000SS*	1000	1000	1175	1255	1035	51	24x36	M33
PEBRD1200SS*	1200	1200	1410	1490	1240	60	32x36	M33
PEBRD1400SS*	1400	1400	1615	1700	1460	60	36x36	M33
PEBRD1600SS*	1600	1600	1825	1910	1660	64	40x39	M36
PEBRD1800SS*	1800	1800	2019	2110	1860	73	44x42	M39
PEBRD2000SS*	2000	2000	2250	2345	2060	76	44x42	M39

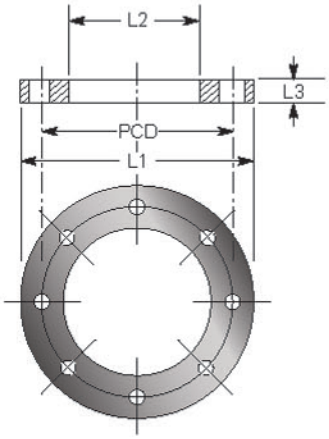

** Made to order products. Please contact an Iplex representative for more information.*

Note: Manufactured from 316 Grade Stainless Steel.
Blind Flanges can be supplied upon request.

Note:
- Multiple suppliers products can be stocked, all dimensions, masses & volumes are approximate only. If critical contact Iplex Pipelines.

Backing Rings

Galvanised Steel Table E (In accordance with AS 2129):

Iplex code	Typical dimensions							
	Nominal diameter DN (mm)	Flange size (mm)	Dim. (mm) PCD	Dim.OD (mm) L1	DimJD (mm) L2	Dim. (mm) L3	Bolt holes No. x Dia	Bolt size
PEBRDE020	20	-	67	95	32	6	4x14	M12
PEBRDE025	25	-	73	100	37	6	4x14	M12
PEBRDE032	32	-	83	115	44	7	4x14	M12
PEBRDE040	40	40	87	120	52	8	4x14	M12
PEBRDE050	50	50	98	135	62	9	4x14	M12
PEBRDE063	63	63	114	150	78	10	4x18	M16
PEBRDE075	75	75	127	165	92	10	4x18	M16
PEBRDE090	90	90	146	185	108	11	4x18	M16
PEBRE110	110	110	178	215	128	13	8x18	M16
PEBRE125	125	125	210	255	140	14	8x18	M16
PEBRE140	140	140	210	255	158	14	8x18	M16
PEBRE160	160	160	235	280	178	17	8x22	M20
PEBRE180	180	180	235	280	195	17	8x22	M20
PEBRE200	200	200	292	335	235	19	8x22	M20
PEBRE225	225	225	292	335	240	19	8x22	M20
PEBRE250	250	250	356	405	290	22	12x22	M20
PEBRE280	280	280	356	405	300	22	12x22	M20
PEBRE315	315	315	406	455	345	25	12x26	M24
PEBRE355	355	355	470	525	376	29	12x26	M24
PEBRE400	400	400	521	580	430	32	12x26	M24
PEBRE450	450	450	584	640	480	32	16x26	M24
PEBRE500	500	500	641	705	533	38	16x26	M24
PEBRE560	560	560	699	760	590	44	16x30	M27
PEBRE630	630	630	756	825	660	48	16x33	M30
PEBRE710*	710	710	845	910	745	51	20x33	M30
PEBRE800*	800	800	984	1060	835	54	20x36	M33
PEBRE1000*	1000	1000	1175	1255	1035	67	24x39	M36
PEBRE1200*	1200	1200	1410	1490	1240	79	32x39	M36

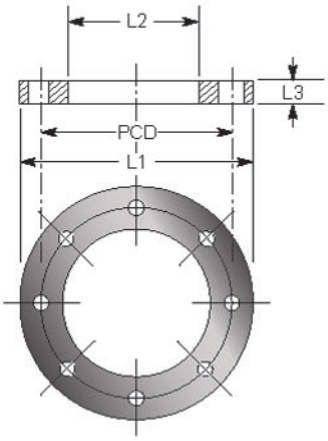

** Made to order products. Please contact an Iplex representative for more information.*
Note: Blind Flanges can be supplied upon request.

Note:
- Multiple suppliers products can be stocked, all dimensions, masses & volumes are approximate only. If critical contact Iplex Pipelines.

Backing Rings

Stainless Steel Table E (In accordance with AS 2129):

Iplex code	Typical dimensions							
	Nominal diameter DN (mm)	Flange size (mm)	Dim. (mm) PCD	Dim.OD (mm) L1	Dim.ID (mm) L2	Dim. (mm) L3	Bolt holes No. x Dia	Bolt size
PEBRDE020SS	20	-	67	95	32	6	4x14	M12
PEBRDE025SS	25	-	73	100	37	6	4x14	M12
PEBRDE032SS	32	-	83	115	44	7	4x14	M12
PEBRDE040SS	40	40	87	120	52	8	4x14	M12
PEBRDE050SS	50	50	98	135	62	9	4x14	M12
PEBRDE063SS	63	63	114	150	78	10	4x18	M16
PEBRDE075SS	75	75	127	165	92	10	4x18	M16
PEBRDE090SS	90	90	146	185	108	11	4x18	M16
PEBRE110SS	110	110	178	215	128	13	8x18	M16
PEBRE125SS	125	125	210	255	140	14	8x18	M16
PEBRE140SS	140	140	210	255	158	14	8x18	M16
PEBRE160SS	160	160	235	280	178	17	8x22	M20
PEBRE180SS	180	180	235	280	195	17	8x22	M20
PEBRE200SS	200	200	292	335	235	19	8x22	M20
PEBRE225SS	225	225	292	335	240	19	8x22	M20
PEBRE250SS	250	250	356	405	290	22	12x22	M20
PEBRE280SS	280	280	356	405	300	22	12x22	M20
PEBRE315SS	315	315	406	455	345	25	12x26	M24
PEBRE355SS*	355	355	470	525	376	29	12x26	M24
PEBRE400SS*	400	400	521	580	430	32	12x26	M24
PEBRE450SS*	450	450	584	640	480	32	16x26	M24
PEBRE500SS*	500	500	641	705	533	38	16x26	M24
PEBRE560SS*	560	560	699	760	590	44	16x30	M27
PEBRE630SS*	630	630	756	825	660	48	16x33	M30
PEBRE710SS*	710	710	845	910	745	51	20x33	M30
PEBRE800SS*	800	800	984	1060	835	54	20x36	M33
PEBRE1000SS*	1000	1000	1175	1255	1035	67	24x39	M36
PEBRE1200SS*	1200	1200	1410	1490	1240	79	32x39	M36

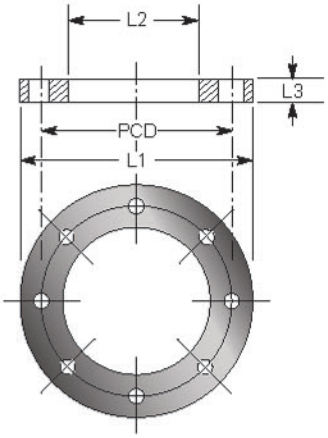

** Made to order products. Please contact an Iplex representative for more information.*

Note: Manufactured from 316 Grade Stainless Steel.
Blind Flanges can be supplied upon request.

Note:
- Multiple suppliers products can be stocked, all dimensions, masses & volumes are approximate only. If critical contact Iplex Pipelines.

Backing Rings

Galvanised Steel - Table ANSI 150 (In accordance with ASME B16.5):

Iplex code	Typical dimensions							
	Nominal diameter Imperial	Nominal diameter DN (mm)	Dim. (mm) PCD	Dim.OD (mm) L1	Dim.ID (mm) L2	Dim. (mm) L3	Bolt Holes No. x Dia	Bolt Size
PEBRA020	½"	20	60.5	90	32	11.2	4x16	M14
PEBRA025	¾"	25	70	98	37	12.8	4x16	M14
PEBRA032	1"	32	79.5	108	44	14.2	4x16	M14
PEBRA040	1 ¼"	40	89	117	52	15.7	4x16	M14
PEBRA050	1 ½"	50	98.5	127	62	17.5	4x16	M14
PEBRA063	2"	63	120.5	152	78	19.0	4x20	M18
PEBRA075	2 ½"	75	139.5	178	92	22.3	4x20	M18
PEBRA090	3"	90	152	191	108	23.9	4x20	M18
PEBRA110	4"	110	190.5	229	128	23.9	8x20	M18
PEBRA125	5"	125	216	254	140	23.9	8x23	M20
PEBRA140	5"	140	216	254	158	23.9	8x23	M20
PEBRA160	6"	160	241	279	178	25.4	8x23	M20
PEBRA180	6"	180	241	279	195	25.4	8x23	M20
PEBRA200	8"	200	298.5	343	235	28.4	8x23	M20
PEBRA225	8"	225	298.5	343	240	28.4	8x23	M20
PEBRA250	10"	250	362	406	290	30.2	12x26	M24
PEBRA280	10"	280	362	406	300	30.2	12x26	M24
PEBRA315	12"	315	432	483	345	31.8	12x26	M24
PEBRA355	14"	355	476	535	376	35.0	12x29	M27
PEBRA400	16"	400	540	600	430	36.6	16x29	M27
PEBRA450	18"	450	578	635	480	39.6	16x32	M30
PEBRA500	20"	500	635	700	533	43.0	20x32	M30
PEBRA560	22"	560	692	750	590	46.0	20x35	M33
PEBRA630	24"	630	749	813	660	47.8	20x35	M33
PEBRA710*	28"	710	863.5	927	745	71.0	28x35	M33
PEBRA800*	32"	800	978	1060	835	81.0	28x41	M38
PEBRA1000*	40"	1000	1124	1290	1030	90.0	36x41	M39
PEBRA1200*	48"	1200	1422.5	1510	1235	108.0	44x41	M39
PEBRA1400*	56"	1400	1594	1683	-	120.0	44x48	M46

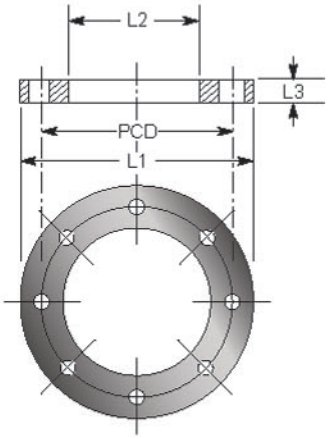

** These sizes are in accordance with ASME B16.47. Sizes 1000mm and above are made to order products. Please contact Iplex Pipelines for more information.*
Note: Blind Flanges can be supplied upon request.

Note:
- Multiple suppliers products can be stocked, all dimensions, masses & volumes are approximate only. If critical contact Iplex Pipelines.

Backing Rings

Stainless Steel - Table ANSI 150 (In accordance with ASME B16.5):

Iplex code	Typical dimensions							
	Nominal diameter Imperial	Nominal diameter DN (mm)	Dim. (mm) PCD	Dim.OD (mm) L1	Dim.ID (mm) L2	Dim. (mm) L3	Bolt holes No. x Dia	Bolt size
PEBRA020SS	½"	20	60.5	90	32	11.2	4x16	M14
PEBRA025SS	¾"	25	70	98	37	12.8	4x16	M14
PEBRA032SS	1"	32	79.5	108	44	14.2	4x16	M14
PEBRA040SS	1 ¼"	40	89	117	52	15.7	4x16	M14
PEBRA050SS	1 ½"	50	98.5	127	62	17.5	4x16	M14
PEBRA063SS	2"	63	120.5	152	78	19.0	4x20	M18
PEBRA075SS	2 ½"	75	139.5	178	92	22.3	4x20	M18
PEBRA090SS	3"	90	152	191	108	23.9	4x20	M18
PEBRA110SS	4"	110	190.5	229	128	23.9	8x20	M18
PEBRA125SS	5"	125	216	254	140	23.9	8x23	M20
PEBRA140SS	5"	140	216	254	158	23.9	8x23	M20
PEBRA160SS	6"	160	241	279	178	25.4	8x23	M20
PEBRA180SS	6"	180	241	279	195	25.4	8x23	M20
PEBRA200SS	8"	200	298.5	343	235	28.4	8x23	M20
PEBRA225SS	8"	225	298.5	343	240	28.4	8x23	M20
PEBRA250SS	10"	250	362	406	290	30.2	12x26	M24
PEBRA280SS	10"	280	362	406	300	30.2	12x26	M24
PEBRA315SS	12"	315	432	483	345	31.8	12x26	M24
PEBRA355SS	14"	355	476	535	376	35.0	12x29	M27
PEBRA400SS	16"	400	540	600	430	36.6	16x29	M27
PEBRA450SS	18"	450	578	635	480	39.6	16x32	M30
PEBRA500SS	20"	500	635	700	533	43.0	20x32	M30
PEBRA560SS	22"	560	692	750	590	46.0	20x35	M33
PEBRA630SS	24"	630	749	813	660	47.8	20x35	M33
PEBRA710SS*	28"	710	863.5	927	745	71.0	28x35	M33
PEBRA800SS*	32"	800	978	1060	835	81.0	28x41	M38
PEBRA1000SS*	40"	1000	1124	1290	1030	90.0	36x41	M39
PEBRA1200SS*	48"	1200	1422.5	1510	1235	108.0	44x41	M39
PEBRA1400SS*	56"	1400	1594	1683	-	120.0	44x48	M46

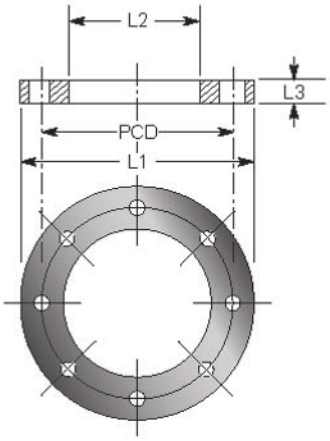

** These sizes are in accordance with ASME B16.47. Sizes 1000mm and above are made to order products. Please contact Iplex Pipelines for more information.*

Note: Manufactured from 316 Grade Stainless Steel.
Blind Flanges can be supplied upon request.

Note:
- Multiple suppliers products can be stocked, all dimensions, masses & volumes are approximate only. If critical contact Iplex Pipelines.

Backing Rings

Galvanised Steel PN16 (In accordance with AS 4087 Figure B7):

Iplex code	Typical dimensions							
	Nominal diameter DN (mm)	Flange size (mm)	Dim. (mm) PCD	Dim.OD (mm) L1	Dim.ID (mm) L2	Dim. (mm) L3	Bolt holes No. x Dia	Bolt size
PEBR16020	20	-	67	95	32	6	4x14	M12
PEBR16025	25	-	73	100	37	6	4x14	M12
PEBR16032	32	-	83	115	44	7	4x14	M12
PEBR16040	40	-	87	120	52	8	4x14	M12
PEBR16050	50	40	98	135	62	9	4x14	M12
PEBR16563	63	50	114	150	78	11	4x18	M16
PEBR16075	75	65	127	165	92	11	4x18	M16
PEBR16090	90	80	146	185	108	11	4x18	M16
PEBR16110	110	100	178	215	128	13	4x18	M16
PEBR16125	125	125	210	255	140	13	8x18	M16
PEBR16125100	125	100	178	215	140	13	8x18	M16
PEBR16140	140	125	210	255	158	13	8x18	M16
PEBR16160	160	150	235	280	178	13	8x18	M16
PEBR16180	180	150	235	280	195	13	8x18	M16
PEBR16200	200	200	292	335	235	19	8x18	M16
PEBR16225200	225	200	292	335	240	19	8x18	M16
PEBR16225	225	225	324	370	238	19	8x18	M16
PEBR16250	250	250	356	405	290	19	8x22	M20
PEBR16280	280	250	356	405	300	19	8x22	M20
PEBR16315	315	300	406	455	345	23	12x22	M20
PEBR16355	355	350	470	525	376	30	12x26	M24
PEBR16400	400	400	521	580	430	30	12x26	M24
PEBR16450	450	450	584	640	480	30	12x26	M24
PEBR16500	500	500	641	705	533	38	16x26	M24
PEBR16560	560	550	699	760	590	48	16x30	M27
PEBR16630	630	600	756	825	660	48	16x30	M27
PEBR16710*	710	700	845	910	745	56	20x30	M27
PEBR16800*	800	800	984	1060	835	56	20x36	M33
PEBR16900*	900	900	1092	1175	950	66	24x36	M33
PEBR161000*	1000	1000	1175	1255	1035	66	24x36	M33
PEBR161200*	1200	1200	1410	1490	1240	75	32x36	M33
PEBR161400*	1400	1400	1615	1700	1460	-	36x36	M33
PEBR161600*	1600	1600	1825	1910	1660	-	40x39	M36
PEBR161800*	1800	1800	2019	2110	1860	-	44x42	M39
PEBR162000*	2000	2000	2250	2345	2060	-	44x42	M39

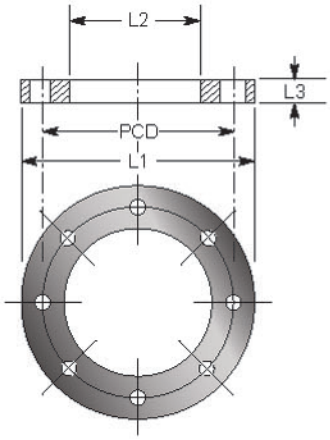

** Made to order products. Please contact an Iplex Representative for more information.*

Note: This table has bolting compatibility with AS 2129 Table D Flanges.
Blind Flanges can be supplied upon request.

Note:
- Multiple suppliers products can be stocked, all dimensions, masses & volumes are approximate only. If critical contact Iplex Pipelines.

Backing Rings

Stainless Steel PN16 (In accordance with AS 4087 Figure B7):

Iplex code	Typical dimensions							
	Nominal diameter DN (mm)	Flange size (mm)	Dim. (mm) PCD	Dim.OD (mm) L1	Dim.ID (mm) L2	Dim. (mm) L3	Bolt holes No. x Dia	Bolt size
PEBR16020SS	20	-	67	95	32	6	4x14	M12
PEBR16025SS	25	-	73	100	37	6	4x14	M12
PEBR16032SS	32	-	83	115	44	7	4x14	M12
PEBR16040SS	40	-	87	120	52	8	4x14	M12
PEBR16050SS	50	40	98	135	62	9	4x14	M12
PEBR16563SS	63	50	114	150	78	11	4x18	M16
PEBR16075SS	75	65	127	165	92	11	4x18	M16
PEBR16090SS	90	80	146	185	108	11	4x18	M16
PEBR16110SS	110	100	178	215	128	13	4x18	M16
PEBR16125SS	125	125	210	255	140	13	8x18	M16
PEBR16125100SS	125	100	178	215	140	13	8x18	M16
PEBR16140SS	140	125	210	255	158	13	8x18	M16
PEBR16160SS	160	150	235	280	178	13	8x18	M16
PEBR16180SS	180	150	235	280	195	13	8x18	M16
PEBR16200SS	200	200	292	335	235	19	8x18	M16
PEBR16225200SS	225	200	292	335	240	19	8x18	M16
PEBR16225SS	225	225	324	370	240	19	8x18	M16
PEBR16250SS	250	250	356	405	290	19	8x22	M20
PEBR16280SS	280	250	356	405	300	19	8x22	M20
PEBR16315SS	315	300	406	455	345	23	12x22	M20
PEBR16355SS	355	350	470	525	376	30	12x26	M24
PEBR16400SS	400	400	521	580	430	30	12x26	M24
PEBR16450SS	450	450	584	640	480	30	12x26	M24
PEBR16500SS*	500	500	641	705	533	38	16x26	M24
PEBR16560SS*	560	550	699	760	590	48	16x30	M27
PEBR16630SS*	630	600	756	825	660	48	16x30	M27
PEBR16710SS*	710	700	845	910	745	56	20x30	M27
PEBR16800SS*	800	800	984	1060	835	56	20x36	M33
PEBR16900SS*	900	900	1092	1175	950	66	24x36	M33
PEBR161000SS*	1000	1000	1175	1255	1035	66	24x36	M33
PEBR161200SS*	1200	1200	1410	1490	1240	75	32x36	M33
PEBR161400SS*	1400	1400	1615	1700	1450	-	36x36	M33
PEBR161600SS*	1600	1600	1825	1910	1660	-	40x39	M36
PEBR161800SS*	1800	1800	2019	2110	1860	-	44x42	M39
PEBR162000SS*	2000	2000	2250	2345	2060	-	44x42	M39

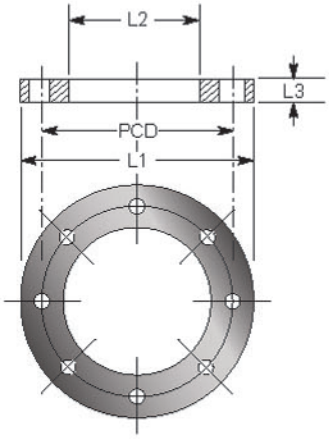

** Made to order products. Please contact an Iplex representative for more information*

Note: This table has bolting compatibility with AS 2129 Table D Flanges.
Manufactured from 316 Grade Stainless Steel.
Blind Flanges can be supplied upon request.

Note:
- Multiple suppliers products can be stocked, all dimensions, masses & volumes are approximate only. If critical contact Iplex Pipelines.

Shouldered Ends (Suitable for Butt Welding only)

PE100 SDR17:

Iplex code	Typical dimensions			
	Nominal diameter DN (mm)	Dim. (mm) L	Dim. (mm) L1	Coupling size
PESE17063	63	68	55	2 ⅜"
PESE17075	75	97	70	3 ½"
PESE17090	90	97	85	3 ½"
PESE17110	110	122	85	4 ½"
PESE17125	125	176	80	6 ½"
PESE17140	140	176	80	6 ½"
PESE17160	160	176	85	6 ½"
PESE17200	200	235	90	8 ⅝"
PESE17225	225	235	90	8 ⅝"
PESE17250	250	287	95	10 ¾"
PESE17280	280	338	105	12 ¾"
PESE17315	315	338	95	12 ¾"
PESE17355	355	370	100	14"
PESE17400	400	420	100	16"
PESE17450	450	472	100	18"
PESE17500	500	522	100	20"

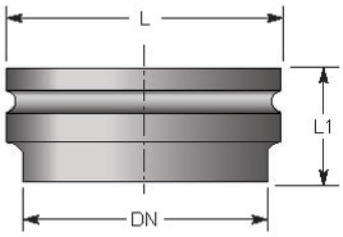

PE100 SDR11:

Iplex code	Typical dimensions			
	Nominal diameter DN (mm)	Dim. (mm) L	Dim. (mm) L1	Coupling size
PESE11063	63	68	55	2 ⅜"
PESE11075	75	97	70	3 ½"
PESE11090	90	97	85	3 ½"
PESE11110	110	122	85	4 ½"
PESE11125	125	176	80	6 ½"
PESE11140	140	176	80	6 ½"
PESE11160	160	176	85	6 ½"
PESE11200	200	235	90	8 ⅝"
PESE11225	225	235	90	8 ⅝"
PESE11250	250	287	95	10 ¾"
PESE11280	280	338	105	12 ¾"
PESE11315	315	338	95	12 ¾"
PESE11355	355	370	100	14"
PESE11400	400	420	100	16"
PESE11450	450	472	100	18"
PESE11500	500	522	100	20"

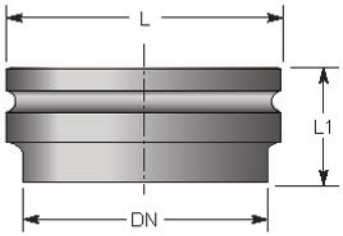

Note:

- Multiple suppliers products can be stocked, all dimensions, masses & volumes are approximate only. If critical contact Iplex Pipelines.

Shouldered End Couplings (Victaulic Coupling)

Iplex code	Typical Dimensions	
	Shouldered end OD	Coupling size
PEVC063	63	2 ⅜"
PEVC075090	75 + 90	3 ½"
PEVC110	110	4 ½"
PEVC125140160	125 + 140 + 160	6 ½"
PEVC200225	200 + 225	8 ⅝"
PEVC250	250	10 ¾"
PEVC280315	280 + 315	12 ¾"
PEVC355	355	14"
PEVC400	400	16"
PEVC450	450	18"

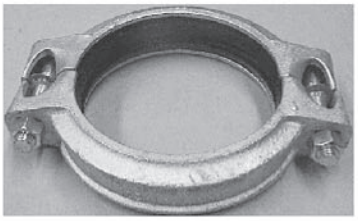

Note: Covers all PN ratings

Note:

- Multiple suppliers products can be stocked, all dimensions, masses & volumes are approximate only. If critical contact Iplex Pipelines.

Sweep Bends (Suitable for Butt Welding only)

Bends 90° - PE100 SDR17:

Iplex code	Typical dimensions			
	Nominal diameter DN (mm)	Dim. (mm) L	Dim. (mm) L1	Dim. (mm) R
PESW1702590	25	200	100	100
PESW1703290	32	228	100	128
PESW1704090	40	260	100	160
PESW1705090	50	275	100	175
PESW1706390	63	325	100	225
PESW1707590	75	455	150	305
PESW1709090	90	455	247	207.5
PESW1711090	110	582	247	335
PESW1712590	125	585	235	350
PESW1714090	140	678	313	365
PESW1716090	160	696	249	447
PESW1718090	180	816	276	447
PESW1720090	200	818	268	550
PESW1722590	225	933	313	620
PESW1725090	250	987	352	635
PESW1728090	280	1038	398	640
PESW1731590	315	1363	603	760
PESW1735590	355	1499	574	925
PESW1740090	400	1717	707	1010
PESW1745090	450	1787	687	1100
PESW1750090	500	1908	708	1200
PESW1756090	560	2206	908	1298
PESW1763090	630	2281	981	1300
PESW1771090	710	2629	1129	1500
PESW1780090	800	3172	1322	1850
PESW1790090	900	2800	1000	1900
PESW17100090	1000	3847	1548	2100

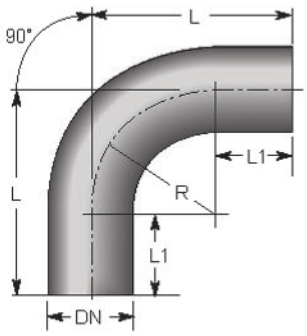

Bends 90° - PE100 SDR11:

Iplex code	Typical dimensions			
	Nominal diameter DN (mm)	Dim. (mm) L	Dim. (mm) L1	Dim. (mm) R
PESW1102590	25	200	100	100
PESW1103290	32	228	100	128
PESW1104090	40	260	100	160
PESW1105090	50	275	100	175
PESW1106390	63	325	100	225
PESW1107590	75	455	150	305
PESW1109090	90	455	247	207.5
PESW1111090	110	582	247	335
PESW1112590	125	585	235	350
PESW1114090	140	678	313	365
PESW1116090	160	696	249	447
PESW1118090	180	816	276	447
PESW1120090	200	818	268	550
PESW1122590	225	933	313	620
PESW1125090	250	987	352	635
PESW1128090	280	1038	398	640
PESW1131590	315	1363	603	760
PESW1135590	355	1499	574	925
PESW1140090	400	1717	707	1010
PESW1145090	450	1787	687	1100
PESW1150090	500	1908	708	1200
PESW1156090	560	2206	908	1298
PESW1163090	630	2281	981	1300
PESW1171090	710	2629	1129	1500
PESW1180090	800	3172	1322	1850
PESW1190090	900	2800	1000	1900
PESW11100090	1000	3847	1548	2100

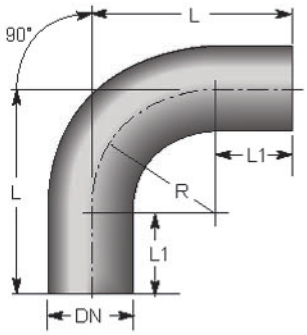

Note:

- Sweep bends suitable for electrofusion can be specially ordered.
- Multiple suppliers products can be stocked, all dimensions, masses & volumes are approximate only. If critical contact Iplex Pipelines.
- Other sizes and SDR's are available and can be made to order, subject to minimum order quantities.

Sweep Bends (Suitable for Butt Welding only)

Bends 60° - PE100 SDR17:

Iplex code	Typical dimensions			
	Nominal diameter DN (mm)	Dim. (mm) L	Dim. (mm) L1	Dim. (mm) R
PESW1702560	25	155	100	100
PESW1703260	32	170	100	128
PESW1704060	40	190	100	160
PESW1705060	50	200	100	175
PESW1706360	63	230	100	225
PESW1707560	75	320	150	305
PESW1709060	90	346	226	207.5
PESW1711060	110	418	225	335
PESW1712560	125	519	317	350
PESW1714060	140	520	309	365
PESW1716060	160	524	266	447
PESW1718060	180	629	317	447
PESW1720060	200	629	312	550
PESW1722560	225	683	326	620
PESW1725060	250	684	318	635
PESW1728060	280	835	465	640
PESW1731560	315	841	402	760
PESW1735560	355	1150	616	925
PESW1740060	400	1255	671	1010
PESW1745060	450	1359	724	1100
PESW1750060	500	1365	672	1200
PESW1756060	560	1721	972	1298
PESW1763060	630	1671	921	1300
PESW1771060	710	1986	1120	1500
PESW1780060	800	2583	1515	1850
PESW1790060	900	2065	900	1930
PESW17100060	1000	3160	1832	2100

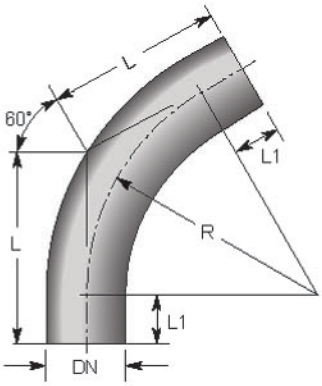

Bends 60° - PE100 SDR11:

Iplex code	Typical dimensions			
	Nominal diameter DN (mm)	Dim. (mm) L	Dim. (mm) L1	Dim. (mm) R
PESW1102560	25	155	100	100
PESW1103260	32	170	100	128
PESW1104060	40	190	100	160
PESW1105060	50	200	100	175
PESW1106360	63	230	100	225
PESW1107560	75	320	150	305
PESW1109060	90	346	226	207.5
PESW1111060	110	418	225	335
PESW1112560	125	519	317	350
PESW1114060	140	520	309	365
PESW1116060	160	524	266	447
PESW1118060	180	629	317	447
PESW1120060	200	629	312	550
PESW1122560	225	683	326	620
PESW1125060	250	684	318	635
PESW1128060	280	835	465	640
PESW1131560	315	841	402	760
PESW1135560	355	1150	616	925
PESW1140060	400	1255	671	1010
PESW1145060	450	1359	724	1100
PESW1150060	500	1365	672	1200
PESW1156060	560	1721	972	1298
PESW1163060	630	1671	921	1300
PESW1171060	710	1986	1120	1500
PESW1180060	800	2583	1515	1850
PESW1190060	900	2065	900	1930
PESW11100060	1000	3160	1832	2100

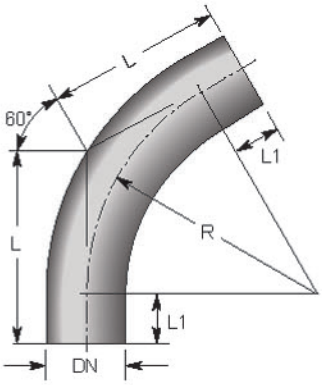

Note:
- Sweep bends suitable for electrofusion can be specially ordered.
- Multiple suppliers products can be stocked, all dimensions, masses & volumes are approximate only. If critical contact Iplex Pipelines.
- 60º bends are a made to order items only.

Sweep Bends (Suitable for Butt Welding only)

Bends 45° - PE100 SDR17:

Iplex code	Typical dimensions			
	Nominal diameter DN (mm)	Dim. (mm) L	Dim. (mm) L1	Dim. (mm) R
PESW1703245	32	150	100	128
PESW1704045	40	165	100	160
PESW1705045	50	170	100	175
PESW1706345	63	190	100	225
PESW1707545	75	270	150	305
PESW1709045	90	340	254	207.5
PESW1711045	110	417	279	335
PESW1712545	125	458	313	350
PESW1714045	140	508	357	365
PESW1716045	160	510	325	447
PESW1718045	180	562	338	447
PESW1720045	200	562	334	550
PESW1722545	225	613	357	620
PESW1725045	250	714	451	635
PESW1728045	280	764	499	640
PESW1731545	315	766	452	760
PESW1735545	355	970	587	925
PESW1740045	400	1122	704	1010
PESW1745045	450	1124	668	1100
PESW1750045	500	1226	729	1200
PESW1756045	560	1367	829	1298
PESW1763045	630	1429	891	1300
PESW1771045	710	1761	1140	1500
PESW1780045	800	2228	1461	1850
PESW1790045	900	1750	1000	1900
PESW17100045	1000	2827	1874	2100

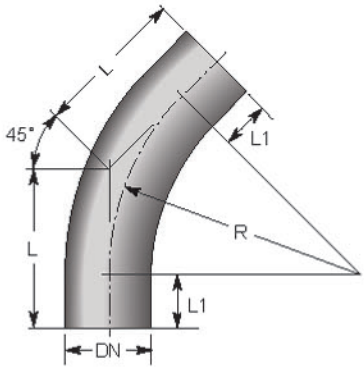

Bends 45° - PE100 SDR11:

Iplex code	Typical dimensions			
	Nominal diameter DN (mm)	Dim. (mm) L	Dim. (mm) L1	Dim. (mm) R
PESW1103245	32	150	100	128
PESW1104045	40	165	100	160
PESW1105045	50	170	100	175
PESW1106345	63	190	100	225
PESW1107545	75	270	150	305
PESW1109045	90	340	254	207.5
PESW1111045	110	417	279	335
PESW1112545	125	458	313	350
PESW1114045	140	508	357	365
PESW1116045	160	510	325	447
PESW1118045	180	562	338	447
PESW1120045	200	562	334	550
PESW1122545	225	613	357	620
PESW1125045	250	714	451	635
PESW1128045	280	764	499	640
PESW1131545	315	766	452	760
PESW1135545	355	970	587	925
PESW1140045	400	1122	704	1010
PESW1145045	450	1124	668	1100
PESW1150045	500	1226	729	1200
PESW1156045	560	1367	829	1298
PESW1163045	630	1429	891	1300
PESW1171045	710	1761	1140	1500
PESW1180045	800	2228	1461	1850
PESW1190045	900	1750	1000	1900
PESW11100045	1000	2827	1874	2100

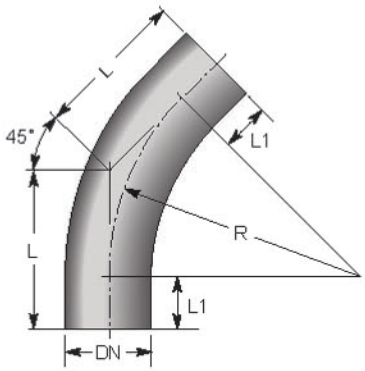

Note:

- Sweep bends suitable for electrofusion can be specially ordered.
- Multiple suppliers products can be stocked, all dimensions, masses & volumes are approximate only. If critical contact Iplex Pipelines.

Sweep Bends (Suitable for Butt Welding only)

Bends 30° - PE100 SDR17:

Iplex code	Typical dimensions			
	Nominal diameter DN (mm)	Dim. (mm) L	Dim. (mm) L1	Dim. (mm) R
PESWI1703230	32	134	100	128
PESWI1704030	40	140	100	160
PESWI1705030	50	146	100	175
PESWI1706330	63	160	100	225
PESWI1707530	75	230	150	305
PESWI1709030	90	326	271	207.5
PESWI1711030	110	402	312	335
PESWI1712530	125	452	358	350
PESWI1714030	140	452	354	365
PESWI1716030	160	453	333	447
PESWI1718030	180	503	359	447
PESWI1720030	200	503	356	550
PESWI1722530	225	554	388	620
PESWI1725030	250	554	384	635
PESWI1728030	280	654	483	640
PESWI1731530	315	655	451	760
PESWI1735530	355	856	608	925
PESWI1740030	400	1006	736	1010
PESWI1745030	450	1007	712	1100
PESWI1750030	500	1108	786	1200
PESWI1756030	560	1234	886	1298
PESWI1763030	630	1309	960	1300
PESWI1771030	710	1662	1260	1500
PESWI1780030	800	2103	1607	1850
PESWI1790030	900	1430	900	1930
PESWI17100030	1000	2482	1866	2100

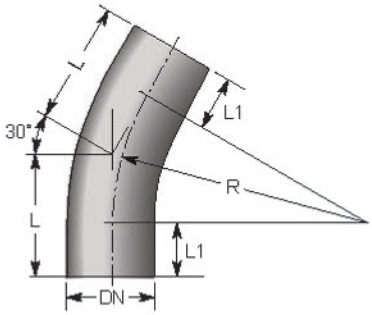

Bends 30° - PE100 SDR11:

Iplex code	Typical dimensions			
	Nominal diameter DN (mm)	Dim. (mm) L	Dim. (mm) L1	Dim. (mm) R
PESWI1103230	32	134	100	128
PESWI1104030	40	140	100	160
PESWI1105030	50	146	100	175
PESWI1106330	63	160	100	225
PESWI1107530	75	230	150	305
PESWI1109030	90	326	271	207.5
PESWI1111030	110	402	312	335
PESWI1112530	125	452	358	350
PESWI1114030	140	452	354	365
PESWI1116030	160	453	333	447
PESWI1118030	180	503	359	447
PESWI1120030	200	503	356	550
PESWI1122530	225	554	388	620
PESWI1125030	250	554	384	635
PESWI1128030	280	654	483	640
PESWI1131530	315	655	451	760
PESWI1135530	355	856	608	925
PESWI1140030	400	1006	736	1010
PESWI1145030	450	1007	712	1100
PESWI1150030	500	1108	786	1200
PESWI1156030	560	1234	886	1298
PESWI1163030	630	1309	960	1300
PESWI1171030	710	1662	1260	1500
PESWI1180030	800	2103	1607	1850
PESWI1190030	900	1430	900	1930
PESWI11100030	1000	2482	1866	2100

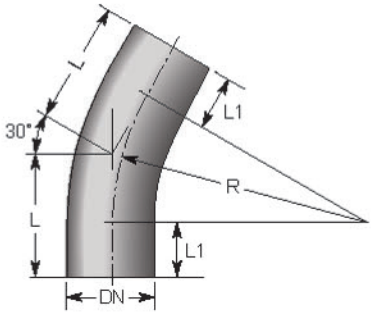

Note:
- Sweep bends suitable for electrofusion can be specially ordered.
- Multiple suppliers products can be stocked, all dimensions, masses & volumes are approximate only. If critical contact Iplex Pipelines.
- 30º bends are made to order items only.

Segmented Bends (Suitable for Butt Welding only)

Bends 90° - PE100 SDR17:

Iplex code	Typical dimensions			
	Nominal diameter DN (mm)	Dim. (mm) L	Dim. (mm) L1	Dim. (mm) R
PESB1709090	90	235	100	135
PESB1711090	110	265	100	165
PESB1712590	125	338	150	188
PESB1714090	140	360	150	210
PESB1716090	160	390	150	240
PESB1718090	180	425	150	270
PESB1720090	200	450	150	300
PESB1722590	225	488	150	338
PESB1725090	250	625	250	375
PESB1728090	280	670	250	420
PESB1731590	315	777	300	477
PESB1735590	355	833	300	533
PESB1740090	400	900	300	600
PESB1745090	450	975	300	675
PESB1750090	500	1100	350	750
PESB1756090	560	1190	350	840
PESB1763090	630	1295	350	945
PESB1771090	710	1415	350	1065
PESB1780090	800	1550	350	1200
PESB1790090	900	-	-	-
PESB17100090	1000	1900	400	1500
PESB17120090	1200	2200	400	1800

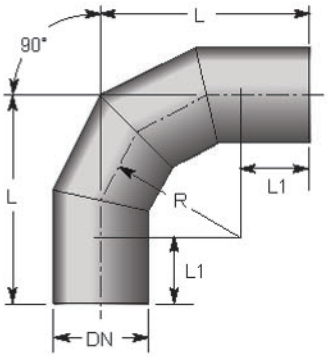

Bends 90° - PE100 SDR11:

Iplex code	Typical dimensions			
	Nominal diameter DN (mm)	Dim. (mm) L	Dim. (mm) L1	Dim. (mm) R
PESB1109090	90	235	100	135
PESB1111090	110	265	100	165
PESB1112590	125	338	150	188
PESB1114090	140	360	150	210
PESB1116090	160	390	150	240
PESB1118090	180	425	150	270
PESB1120090	200	450	150	300
PESB1122590	225	488	150	338
PESB1125090	250	625	250	375
PESB1128090	280	670	250	420
PESB1131590	315	777	300	477
PESB1135590	355	833	300	533
PESB1140090	400	900	300	600
PESB1145090	450	975	300	675
PESB1150090	500	1100	350	750
PESB1156090	560	1190	350	840
PESB1163090	630	1295	350	945
PESB1171090	710	1415	350	1065
PESB1180090	800	1550	350	1200
PESB1190090	900	-	-	-
PESB11100090	1000	1900	400	1500
PESB11120090	1200	2200	400	1800

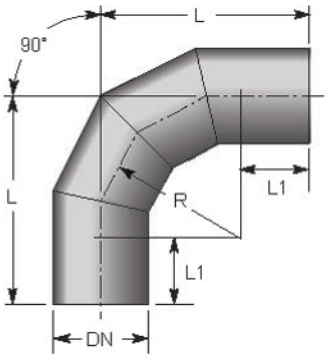

Note:

- Segmented bends are subject to pressure de-rating. Please refer to www.pipa.com.au for details.
- All dimensions, masses & volumes are approximate only. If critical contact Iplex Pipelines.

Segmented Bends (Suitable for Butt Welding only)

Bends 60° - PE100 SDR17:

Iplex code	Typical dimensions			
	Nominal diameter DN (mm)	Dim. (mm) L	Dim. (mm) L1	Dim. (mm) R
PESB1709060	90	178	100	135
PESB1711060	110	195	100	165
PESB1712560	125	258	150	188
PESB1714060	140	275	150	210
PESB1716060	160	288	150	240
PESB1718060	180	301	150	270
PESB1720060	200	323	150	300
PESB1722560	225	345	150	338
PESB1725060	250	466	250	375
PESB1728060	280	492	250	420
PESB1731560	315	576	300	477
PESB1735560	355	608	300	533
PESB1740060	400	646	300	600
PESB1745060	450	689	300	675
PESB1750060	500	783	350	750
PESB1756060	560	835	350	840
PESB1763060	630	896	350	945
PESB1771060	710	965	350	1065
PESB1780060	800	1043	350	1200
PESB1790060	900	-	-	-
PESB17100060	1000	1267	400	1500
PESB17120060	1200	1440	400	1800

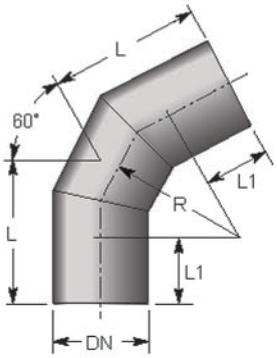

Bends 60° - PE100 SDR11:

Iplex code	Typical dimensions			
	Nominal diameter DN (mm)	Dim. (mm) L	Dim. (mm) L1	Dim. (mm) R
PESB1109060	90	178	100	135
PESB1111060	110	195	100	165
PESB1112560	125	258	150	188
PESB1114060	140	275	150	210
PESB1116060	160	288	150	240
PESB1118060	180	301	150	270
PESB1120060	200	323	150	300
PESB1122560	225	345	150	338
PESB1125060	250	466	250	375
PESB1128060	280	492	250	420
PESB1131560	315	576	300	477
PESB1135560	355	608	300	533
PESB1140060	400	646	300	600
PESB1145060	450	689	300	675
PESB1150060	500	783	350	750
PESB1156060	560	835	350	840
PESB1163060	630	896	350	945
PESB1171060	710	965	350	1065
PESB1180060	800	1043	350	1200
PESB1190060	900	-	-	-
PESB11100060	1000	1267	400	1500
PESB11120060	1200	1440	400	1800

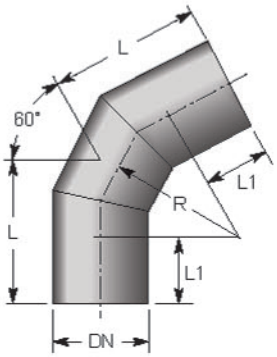

Note:

- Segmented bends are subject to pressure de-rating. Please refer to www.pipa.com.au for details.
- All dimensions, masses & volumes are approximate only. If critical contact Iplex Pipelines.

Segmented Bends (Suitable for Butt Welding only)

Bends 45° - PE100 SDR17:

Iplex code	Typical dimensions			
	Nominal diameter DN (mm)	Dim. (mm) L	Dim. (mm) L1	Dim. (mm) R
PESB1709045	90	156	100	135
PESB1711045	110	168	100	165
PESB1712545	125	227	150	188
PESB1714045	140	237	150	210
PESB1716045	160	249	150	240
PESB1718045	180	261	150	270
PESB1720045	200	274	150	300
PESB1722545	225	290	150	338
PESB1725045	250	412	250	375
PESB1728045	280	474	250	420
PESB1731545	315	498	300	477
PESB1735545	355	520	300	533
PESB1740045	400	548	300	600
PESB1745045	450	580	300	675
PESB1750045	500	665	350	750
PESB1756045	560	698	350	840
PESB1763045	630	741	350	945
PESB1771045	710	791	350	1065
PESB1780045	800	847	350	1200
PESB1790045	900	-	-	-
PESB17100045	1000	1022	400	1500
PESB17120045	1200	1146	400	1800

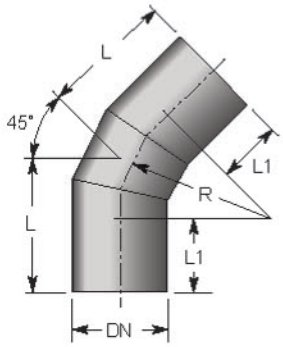

Bends 45° - PE100 SDR11:

Iplex code	Typical dimensions			
	Nominal diameter DN (mm)	Dim. (mm) L	Dim. (mm) L1	Dim. (mm) R
PESB1109045	90	156	100	135
PESB1111045	110	168	100	165
PESB1112545	125	227	150	188
PESB1114045	140	237	150	210
PESB1116045	160	249	150	240
PESB1118045	180	261	150	270
PESB1120045	200	274	150	300
PESB1122545	225	290	150	338
PESB1125045	250	412	250	375
PESB1128045	280	474	250	420
PESB1131545	315	498	300	477
PESB1135545	355	520	300	533
PESB1140045	400	548	300	600
PESB1145045	450	580	300	675
PESB1150045	500	665	350	750
PESB1156045	560	698	350	840
PESB1163045	630	741	350	945
PESB1171045	710	791	350	1065
PESB1180045	800	847	350	1200
PESB1190045	900	-	-	-
PESB11100045	1000	1022	400	1500
PESB11120045	1200	1146	400	1800

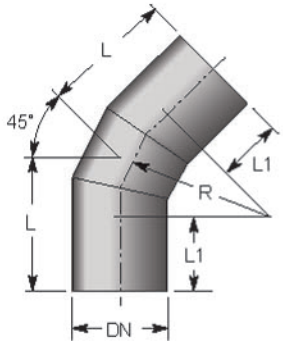

Note:
- Segmented bends are subject to pressure de-rating. Please refer to www.pipa.com.au for details.
- All dimensions, masses & volumes are approximate only. If critical contact Iplex Pipelines.

Segmented Bends (Suitable for Butt Welding only)

Bends 30° - PE100 SDR17:

Iplex code	Typical dimensions			
	Nominal diameter DN (mm)	Dim. (mm) L	Dim. (mm) L1	Dim. (mm) R
PESB1709030	90	135	100	135
PESB1711030	110	143	150	165
PESB1712530	125	199	150	188
PESB1714030	140	205	150	210
PESB1716030	160	213	150	240
PESB1718030	180	220	150	270
PESB1720030	200	230	150	300
PESB1722530	225	241	150	338
PESB1725030	250	350	250	375
PESB1728030	280	362	250	420
PESB1731530	315	428	300	477
PESB1735530	355	443	300	533
PESB1740030	400	461	300	600
PESB1745030	450	481	300	675
PESB1750030	500	551	350	750
PESB1756030	560	575	350	840
PESB1763030	630	603	350	945
PESB1771030	710	631	350	1065
PESB1780030	800	666	350	1200
PESB1790030	900	-	-	-
PESB17100030	1000	795	400	1500
PESB17120030	1200	875	400	1800

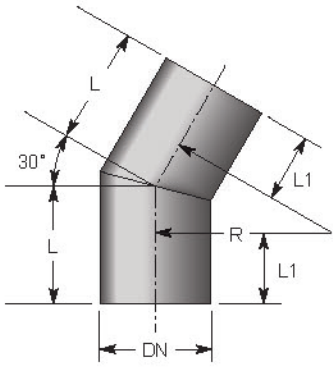

Bends 30° - PE100 SDR11:

Iplex code	Typical dimensions			
	Nominal diameter DN (mm)	Dim. (mm) L	Dim. (mm) L1	Dim. (mm) R
PESB1109030	90	135	100	135
PESB1111030	110	143	150	165
PESB1112530	125	199	150	188
PESB1114030	140	205	150	210
PESB1116030	160	213	150	240
PESB1118030	180	220	150	270
PESB1120030	200	230	150	300
PESB1122530	225	241	150	338
PESB1125030	250	350	250	375
PESB1128030	280	362	250	420
PESB1131530	315	428	300	477
PESB1135530	355	443	300	533
PESB1140030	400	461	300	600
PESB1145030	450	481	300	675
PESB1150030	500	551	350	750
PESB1156030	560	575	350	840
PESB1163030	630	603	350	945
PESB1171030	710	631	350	1065
PESB1180030	800	666	350	1200
PESB1190030	900	-	-	-
PESB11100030	1000	795	400	1500
PESB11120030	1200	875	400	1800

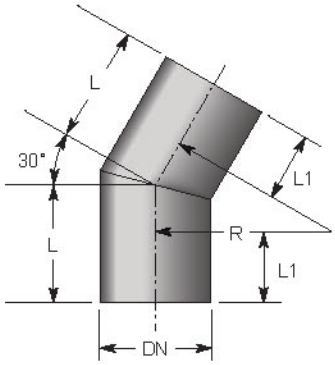

Note:
- Segmented bends are subject to pressure de-rating. Please refer to www.pipa.com.au for details.
- All dimensions, masses & volumes are approximate only. If critical contact Iplex Pipelines.

Long Spigot Short Radius Elbows (Suitable for Electrofusion and Butt Welding)

Bends 90° - PE100 SDR17:

Iplex code	Typical dimensions	
	Nominal diameter DN (mm)	Dim. (mm) L
PEE1706390LS	63	115
PEE1707590LS	75	130
PEE1709090LS	90	150
PEE1711090LS	110	165
PEE1712590LS	125	180
PEE1714090LS	140	194
PEE1716090LS	160	210
PEE1718090LS	180	232
PEE1720090LS	200	253
PEE1722590LS	225	270
PEE1725090LS	250	292
PEE1728090LS	280	320
PEE1731590LS	315	370

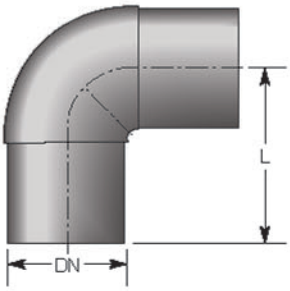

Bends 90° - PE100 SDR11:

Iplex code	Typical dimensions	
	Nominal diameter DN (mm)	Dim. (mm) L
PEE1102090LS	20	75
PEE1102590LS	25	80
PEE1103290LS	32	85
PEE1104090LS	40	95
PEE1105090LS	50	105
PEE1106390LS	63	115
PEE1107590LS	75	130
PEE1109090LS	90	150
PEE1111090LS	110	165
PEE1112590LS	125	180
PEE1114090LS	140	194
PEE1116090LS	160	210
PEE1118090LS	180	232
PEE1120090LS	200	253
PEE1122590LS	225	270
PEE1125090LS	250	292
PEE1128090LS	280	320
PEE1131590LS	315	370

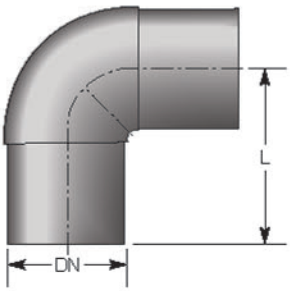

Note:
- EF coupling (EG07) required for electrofusion.
- Multiple suppliers products can be stocked, all dimensions, masses & volumes are approximate only. If critical contact Iplex Pipelines.
- Other sizes and SDR's are available and can be made to order, subject to minimum order quantities.
- Fittings may be supplied with welded spigots to enable the use of electrofusion couplings.

Long Spigot Short Radius Elbows (Suitable for Electrofusion and Butt Welding)

Bends 45° - PE100 SDR17:

Iplex code	Typical dimensions	
	Nominal diameter DN (mm)	Dim. (mm) L
PEE1702045LS	20	70
PEE1702545LS	25	75
PEE1703245LS	32	80
PEE1704045LS	40	85
PEE1705045LS	50	90
PEE1706345LS	63	95
PEE1707545LS	75	105
PEE1709045LS	90	120
PEE1711045LS	110	130
PEE1712545LS	125	140
PEE1714045LS	140	164
PEE1716045LS	160	162
PEE1718045LS	180	170
PEE1720045LS	200	186
PEE1722545LS	225	200
PEE1725045LS	250	220
PEE1728045LS	280	230
PEE1731545LS	315	250

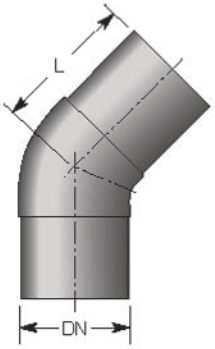

Bends 45° - PE100 SDR11:

Iplex code	Typical dimensions	
	Nominal diameter DN (mm)	Dim. (mm) L
PEE1102045LS	20	70
PEE1102545LS	25	75
PEE1103245LS	32	80
PEE1104045LS	40	85
PEE1105045LS	50	90
PEE1106345LS	63	95
PEE1107545LS	75	105
PEE1109045LS	90	120
PEE1111045LS	110	130
PEE1112545LS	125	140
PEE1114045LS	140	164
PEE1116045LS	160	162
PEE1118045LS	180	170
PEE1120045LS	200	186
PEE1122545LS	225	200
PEE1125045LS	250	220
PEE1128045LS	280	230
PEE1131545LS	315	250

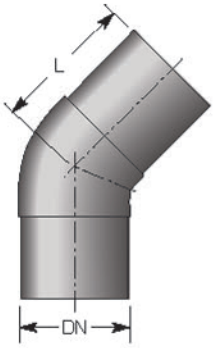

Note:

- EF coupling (EG07) required for electrofusion.
- Multiple suppliers products can be stocked, all dimensions, masses & volumes are approximate only. If critical contact Iplex Pipelines.
- Other sizes and SDR's are available and can be made to order, subject to minimum order quantities.
- Fittings may be supplied with welded spigots to enable the use of electrofusion couplings.

Short Radius Moulded Elbows (Suitable for Butt Welding only)

Bends 90° - PE100 SDR17:

Iplex code	Typical dimensions	
	Nominal diameter DN (mm)	Dim. (mm) L
PEE1706390	63	66
PEE1707590	75	100
PEE1709090	90	100
PEE1711090	110	141
PEE1712590	125	140
PEE1714090	140	155
PEE1716090	160	175
PEE1718090	180	195
PEE1720090	200	215
PEE1722590	225	245
PEE1725090	250	256
PEE1728090	280	286
PEE1731590	315	321
PEE1735590	355	380
PEE1740090	400	434
PEE1745090	450	445
PEE1750090	500	450

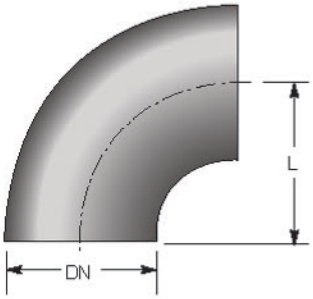

Bends 90° - PE100 SDR11:

Iplex code	Typical dimensions	
	Nominal diameter DN (mm)	Dim. (mm) L
PEE1106390	63	66
PEE1107590	75	100
PEE1109090	90	100
PEE1111090	110	141
PEE1112590	125	140
PEE1114090	140	155
PEE1116090	160	175
PEE1118090	180	195
PEE1120090	200	215
PEE1122590	225	245
PEE1125090	250	256
PEE1128090	280	286
PEE1131590	315	321
PEE1135590	355	380
PEE1140090	400	434
PEE1145090	450	445
PEE1150090	500	450

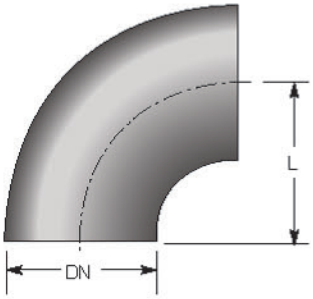

Note:

- Multiple suppliers products can be stocked, all dimensions, masses & volumes are approximate only. If critical contact Iplex Pipelines.

CNC Welded "Y" Pieces (Suitable for Electrofusion and Butt Welding)

90° - PE100 SDR17:

Iplex code	Typical dimensions		
	Nominal diameter DN (mm)	Dim. (mm) L	Dim. (mm) L1
PEY17090LS	90	200	450
PEY17110LS	110	250	450
PEY17125LS	125	250	450
PEY17140LS	140	500	600
PEY17160LS	160	500	600
PEY17180LS	180	500	750
PEY17200LS	200	500	750
PEY17225LS	225	550	750
PEY17250LS	250	650	900
PEY17280LS	280	650	900
PEY17315LS	315	700	1050
PEY17355LS	355	700	1180
PEY17400LS	400	1100	1250
PEY17450LS	450	1100	1300
PEY17500LS	500	1200	1400
PEY17560LS	560	1200	1400
PEY17630LS	630	1200	1440
PEY17710LS	710	1700	1500
PEY17800LS	800	1700	1500

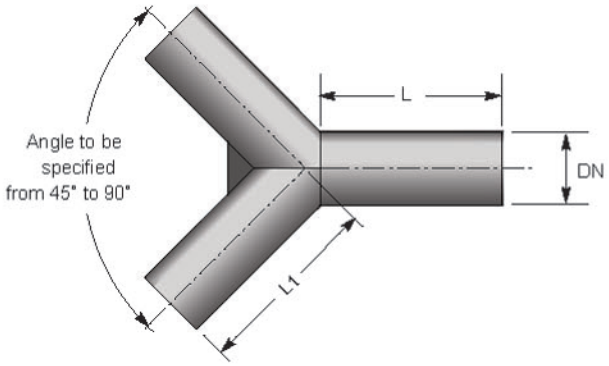

90° - PE100 SDR11:

Iplex code	Typical dimensions		
	Nominal diameter DN (mm)	Dim. (mm) L	Dim. (mm) L1
PEY11090LS	90	200	450
PEY11110LS	110	250	450
PEY11125LS	125	250	450
PEY11140LS	140	500	600
PEY11160LS	160	500	600
PEY11180LS	180	500	750
PEY11200LS	200	500	750
PEY11225LS	225	550	750
PEY11250LS	250	650	900
PEY11280LS	280	650	900
PEY11315LS	315	700	1050
PEY11355LS	355	700	1180
PEY11400LS	400	1100	1250
PEY11450LS	450	1100	1300
PEY11500LS	500	1200	1400
PEY11560LS	560	1200	1400
PEY11630LS	630	1200	1440
PEY11710LS	710	1700	1500
PEY11800LS	800	1700	1500

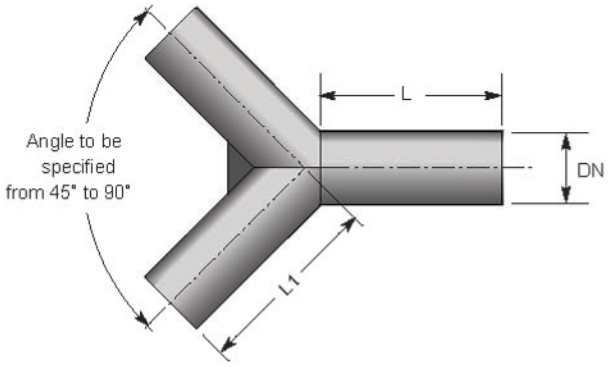

Note:
- These fittings are subject to pressure de-rating. Please refer to www.pipa.com.au for details.
- EF coupling (EG07) required for electrofusion.
- Multiple suppliers products can be stocked, all dimensions, masses & volumes are approximate only. If critical contact Iplex Pipelines.

CNC Welded Junctions (Suitable for Electrofusion and Butt Welding)

45° - PE100 SDR17:

Iplex code	Typical dimensions			
	Nominal diameter DN (mm)	Dim. (mm) L	Dim. (mm) L1	Dim. (mm) L2
PEYJ1709045LS	90	700	270	430
PEYJ1711045LS	110	700	270	430
PEYJ1712545LS	125	750	300	450
PEYJ1714045LS	140	780	300	480
PEYJ1716045LS	160	850	330	520
PEYJ1718045LS	180	950	360	590
PEYJ1720045LS	200	960	370	590
PEYJ1722545LS	225	1080	420	660
PEYJ1725045LS	250	1150	450	710
PEYJ1728045LS	280	1250	500	750
PEYJ1731545LS	315	1350	530	820
PEYJ1735545LS	355	1450	570	880
PEYJ1740045LS	400	1550	600	950
PEYJ1745045LS	450	1850	650	1200
PEYJ1750045LS	500	2100	700	1400
PEYJ1756045LS	560	2200	800	1400
PEYJ1763045LS	630	2300	800	1500
PEYJ1771045LS	710	2600	900	1700
PEYJ1780045LS	800	2800	1000	1800
PEYJ1790045LS	900	3200	1200	2000

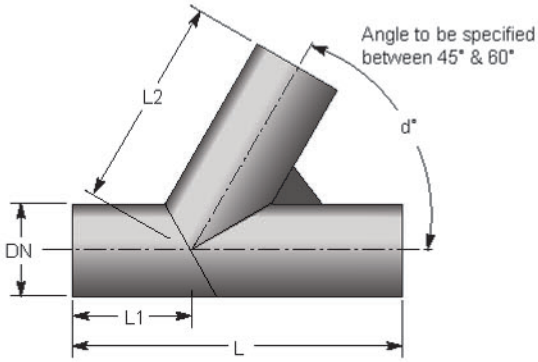

CNC Welded Junctions (Suitable for Electrofusion and Butt Welding)

45° - PE100 SDR11:

Iplex code	Typical dimensions			
	Nominal diameter DN (mm)	Dim. (mm) L	Dim. (mm) L1	Dim. (mm) L2
PEYJ1109045LS	90	700	270	430
PEYJ1111045LS	110	700	270	430
PEYJ1112545LS	125	750	300	450
PEYJ1114045LS	140	780	300	480
PEYJ1116045LS	160	850	330	520
PEYJ1118045LS	180	950	360	590
PEYJ1120045LS	200	960	370	590
PEYJ1122545LS	225	1080	420	660
PEYJ1125045LS	250	1150	450	710
PEYJ1128045LS	280	1250	500	750
PEYJ1131545LS	315	1350	530	820
PEYJ1135545LS	355	1450	570	880
PEYJ1140045LS	400	1550	600	950
PEYJ1145045LS	450	1850	650	1200
PEYJ1150045LS	500	2100	700	1400
PEYJ1156045LS	560	2200	800	1400
PEYJ1163045LS	630	2300	800	1500
PEYJ1171045LS	710	2600	900	1700
PEYJ1180045LS	800	2800	1000	1800
PEYJ1190045LS	900	3200	1200	2000

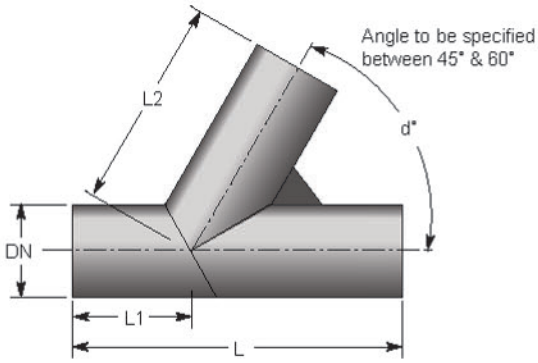

Note:
- These fittings are manufactured from SDR11 pipe and are subjected to pressure de-rating. Please refer to www.pipa.com.au for details.
- EF coupling (EG07) required for electrofusion.
- Multiple suppliers products can be stocked, all dimensions, masses & volumes are approximate only. If critical contact Iplex Pipelines.

CNC Tees (Suitable for Electrofusion and Butt Welding)

PE100 SDR17:

Iplex code	Typical dimensions		
	Nominal diameter DN (mm)	Dim. (mm) L	Dim. (mm) L1
PETF17090LS	90	400	200
PETF17110LS	110	500	250
PETF17125LS	125	500	250
PETF17140LS	140	500	500
PETF17160LS	160	600	500
PETF17180LS	180	620	500
PETF17200LS	200	650	500
PETF17225LS	225	650	550
PETF17250LS	250	700	650
PETF17280LS	280	700	650
PETF17315LS	315	800	700
PETF17355LS	355	800	700
PETF17400LS	400	1000	1100
PETF17450LS	450	1100	1100
PETF17500LS	500	1200	1200
PETF17560LS	560	1200	1200
PETF17630LS	630	1200	1200
PETF17710LS	710	1500	1700
PETF17800LS	800	1600	1700
PETF171000LS	1000	1800	1700

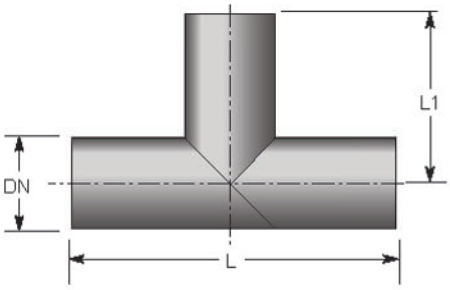

PE100 SDR11:

Iplex code	Typical dimensions		
	Nominal diameter DN (mm)	Dim. (mm) L	Dim. (mm) L1
PETF11090LS	90	400	200
PETF11110LS	110	500	250
PETF11125LS	125	500	250
PETF11140LS	140	500	500
PETF11160LS	160	600	500
PETF11180LS	180	620	500
PETF11200LS	200	650	500
PETF11225LS	225	650	550
PETF11250LS	250	700	650
PETF11280LS	280	700	650
PETF11315LS	315	800	700
PETF11355LS	355	800	700
PETF11400LS	400	1000	1100
PETF11450LS	450	1100	1100
PETF11500LS	500	1200	1200
PETF11560LS	560	1200	1200
PETF11630LS	630	1200	1200
PETF11710LS	710	1500	1700
PETF11800LS	800	1600	1700
PETF111000LS	1000	1800	1700

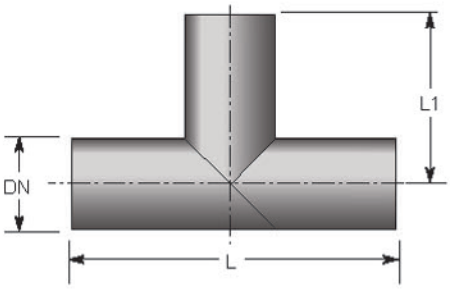

Note:

- These fittings are subject to pressure de-rating. Please refer to www.pipa.com.au for details.
- Multiple suppliers products can be stocked, all dimensions, masses & volumes are approximate only. If critical contact Iplex Pipelines.

Long Spigot Moulded Tees (Suitable for Electrofusion and Butt Welding)

PE100 SDR17:

Iplex code	Typical dimensions		
	Nominal diameter DN (mm)	Dim. (mm) L	Dim. (mm) L1
PET17063LS	63	230	115
PET17075LS	75	264	132
PET17090LS	90	300	150
PET17110LS	110	330	165
PET17125LS	125	366	183
PET17140LS	140	393	193
PET17160LS	160	420	210
PET17180LS	180	460	230
PET17200LS	200	500	250
PET17225LS	225	540	270
PET17250LS	250	575	288
PET17280LS	280	615	308
PET17315LS	315	695	346
PET17355LS	355	818	410
PET17400LS	400	910	455
PET17450LS	450	970	485
PET17500LS	500	1060	530
PET17560LS	560	1510	755
PET17630LS	630	1630	815
PET17710LS	710	1720	860
PET17800LS	800	1780	890

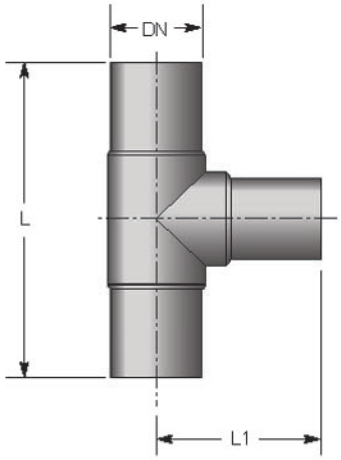

PE100 SDR11:

Iplex code	Typical dimensions		
	Nominal diameter DN (mm)	Dim. (mm) L	Dim. (mm) L1
PET11025LS	25	160	80
PET11032LS	32	170	85
PET11040LS	40	190	95
PET11050LS	50	210	105
PET11063LS	63	230	115
PET11075LS	75	264	132
PET11090LS	90	300	150
PET11110LS	110	330	165
PET11125LS	125	366	183
PET11140LS	140	393	193
PET11160LS	160	420	210
PET11180LS	180	460	230
PET11200LS	200	500	250
PET11225LS	225	540	270
PET11250LS	250	575	288
PET11280LS	280	615	308
PET11315LS	315	695	346
PET11355LS	355	818	410
PET11400LS	400	910	455
PET11450LS	450	970	485
PET11500LS	500	1060	530
PET11560LS	560	1510	755
PET11630LS	630	1630	815
PET11710LS	710	1720	860
PET11800LS	800	1780	890

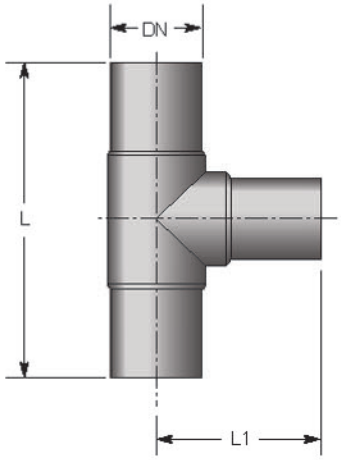

Note:
- EF coupling (EG07) required for electrofusion.
- Multiple suppliers products can be stocked, all dimensions, masses & volumes are approximate only. If critical contact Iplex Pipelines.
- Fittings may be supplied with welded spigots to make suitable for electrofusion.

Fabricated Reducing Tees
(Electrofusion and Butt Welding suitable on branch only, Mainline Butt Weld only)

PE100 SDR17:

Iplex code	Typical dimensions			
	Nominal diameter DN1 (mm)	Nominal diameter DN2 (mm)	Dim. (mm) L	Dim. (mm) L1
PETFR17200090	200	90	600	550
PETFR17200110	200	110	600	550
PETFR17225090	225	90	600	550
PETFR17225110	225	110	600	550
PETFR17250090	250	90	600	650
PETFR17250110	250	110	600	650
PETFR17250160	250	160	600	650
PETFR17280090	280	90	600	650
PETFR17280110	280	110	600	650
PETFR17280160	280	160	600	650
PETFR17280200	280	200	600	650
PETFR17315090	315	90	600	700
PETFR17315110	315	110	600	700
PETFR17315160	315	160	650	700
PETFR17315200	315	200	650	700
PETFR17355090	355	90	650	700
PETFR17355110	355	110	650	700
PETFR17355160	355	160	650	700
PETFR17355200	355	200	700	700
PETFR17355225	355	225	700	700
PETFR17355250	355	250	700	700
PETFR17400090	400	90	800	750
PETFR17400110	400	110	800	750
PETFR17400160	400	160	800	750
PETFR17400200	400	200	900	750
PETFR17400225	400	225	900	750
PETFR17400250	400	250	900	750
PETFR17400280	400	280	900	750
PETFR17450090	450	90	900	750
PETFR17450110	450	110	900	750
PETFR17450160	450	160	900	750
PETFR17450200	450	200	1000	750
PETFR17450225	450	225	1000	750
PETFR17450250	450	250	1000	800
PETFR17450280	450	280	1000	800
PETFR17450315	450	315	1000	800
PETFR17500160	500	160	1000	800
PETFR17500200	500	200	1000	800
PETFR17500225	500	225	1000	800
PETFR17500250	500	250	1000	900
PETFR17500280	500	280	1000	900
PETFR17500315	500	315	1000	900
PETFR17500355	500	355	1000	900
PETFR17560200	560	200	1000	900
PETFR17560225	560	225	1000	900
PETFR17560250	560	250	1000	900
PETFR17560280	560	280	1000	1200
PETFR17560315	560	315	1000	1200
PETFR17560355	560	355	1000	1200
PETFR17630160	630	160	1000	1200
PETFR17630200	630	200	1000	1200
PETFR17630225	630	225	1000	1200
PETFR17630250	630	250	1000	1200
PETFR17630280	630	280	1000	1200
PETFR17630315	630	315	1100	1200
PETFR17630355	630	355	1100	1200
PETFR17630400	630	400	1200	1200
PETFR17630450	630	450	1200	1200

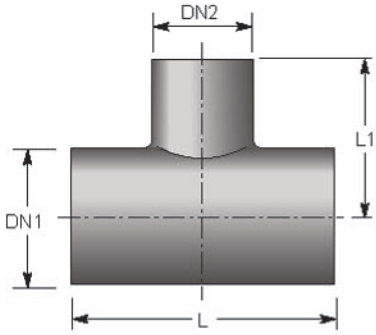

Note:
- Sizes from DN1200mm to 2000mm are made to order. Please contact Iplex Pipelines.
- These fittings are subject to pressure de-rating. Please refer to www.pipa.com.au for details.
- EF coupling (EG07) required for electrofusion for branch only if required.
- Multiple suppliers products can be stocked, all dimensions, masses & volumes are approximate only. If critical contact Iplex Pipelines.
- Main branches can be maufactured to suit electrofusion at a higher cost and with different dimensions.

Fabricated Reducing Tees
(Electrofusion and Butt Welding suitable on branch only, Mainline Butt Weld only) Continued...

PE100 SDR17:

Iplex code	Typical dimensions			
	Nominal diameter DN1 (mm)	Nominal diameter DN2 (mm)	Dim. (mm) L	Dim. (mm) L1
PETFR17710200	710	200	1100	1200
PETFR17710225	710	225	1100	1200
PETFR17710250	710	250	1100	1200
PETFR17710280	710	280	1200	1200
PETFR17710315	710	315	1200	1200
PETFR17710355	710	355	1200	1200
PETFR17710400	710	400	1300	1500
PETFR17710450	710	450	1300	1500
PETFR17710500	710	500	1300	1500
PETFR17800200	800	200	1100	1200
PETFR17800225	800	225	1100	1200
PETFR17800250	800	250	1200	1200
PETFR17800280	800	280	1200	1200
PETFR17800315	800	315	1200	1200
PETFR17800355	800	355	1300	1200
PETFR17800400	800	400	1300	1600
PETFR17800450	800	450	1400	1600
PETFR17800500	800	500	1400	1600
PETFR17800560	800	560	1500	1600
PETFR17800630	800	630	1500	1600
PETFR171000200	1000	200	1400	1200
PETFR171000225	1000	225	1400	1200
PETFR171000250	1000	250	1400	1200
PETFR171000280	1000	280	1400	1200
PETFR171000315	1000	315	1500	1200
PETFR171000355	1000	355	1500	1200
PETFR171000400	1000	400	1500	1700
PETFR171000450	1000	450	1600	1700
PETFR171000500	1000	500	1600	1700
PETFR171000560	1000	560	1700	1700
PETFR171000630	1000	630	1700	1700
PETFR171200250	1200	250	1500	1300
PETFR171200280	1200	280	1500	1300
PETFR171200315	1200	315	1600	1300
PETFR171200355	1200	355	1600	1300
PETFR171200400	1200	400	1700	1800
PETFR171200450	1200	450	1700	1800
PETFR171200500	1200	500	1800	1800
PETFR171200560	1200	560	1800	1800
PETFR171200630	1200	630	1800	1800

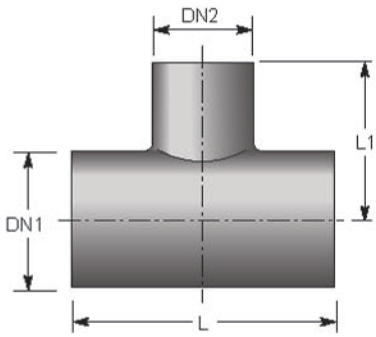

Note:
- Sizes from DN1200mm to 2000mm are made to order. Please contact Iplex Pipelines.
- These fittings are subject to pressure de-rating. Please refer to www.pipa.com.au for details.
- EF coupling (EG07) required for electrofusion for branch only if required.
- Multiple suppliers products can be stocked, all dimensions, masses & volumes are approximate only. If critical contact Iplex Pipelines.
- Main branches can be maufactured to suit electrofusion at a higher cost and with different dimensions.

Fabricated Reducing Tees
(Electrofusion and Butt Welding suitable on branch only, Mainline Butt Weld only)

PE100 SDR11:

Iplex code	Typical dimensions			
	Nominal diameter DN1 (mm)	Nominal diameter DN2 (mm)	Dim. (mm) L	Dim. (mm) L1
PETFR11200090	200	90	600	550
PETFR11200110	200	110	600	550
PETFR11225090	225	90	600	550
PETFR11225110	225	110	600	550
PETFR11250090	250	90	600	650
PETFR11250110	250	110	600	650
PETFR11250160	250	160	600	650
PETFR11280090	280	90	600	650
PETFR11280110	280	110	600	650
PETFR11280160	280	160	600	650
PETFR11280200	280	200	600	650
PETFR11315090	315	90	600	700
PETFR11315110	315	110	600	700
PETFR11315160	315	160	650	700
PETFR11315200	315	200	650	700
PETFR11355090	355	90	650	700
PETFR11355110	355	110	650	700
PETFR11355160	355	160	650	700
PETFR11355200	355	200	700	700
PETFR11355225	355	225	700	700
PETFR11355250	355	250	700	700
PETFR11400090	400	90	800	750
PETFR11400110	400	110	800	750
PETFR11400160	400	160	800	750
PETFR11400200	400	200	900	750
PETFR11400225	400	225	900	750
PETFR11400250	400	250	900	750
PETFR11400280	400	280	900	750
PETFR11450090	450	90	900	750
PETFR11450110	450	110	900	750
PETFR11450160	450	160	900	750
PETFR11450200	450	200	1000	750
PETFR11450225	450	225	1000	750
PETFR11450250	450	250	1000	800
PETFR11450280	450	280	1000	800
PETFR11450315	450	315	1000	800
PETFR11500160	500	160	1000	800
PETFR11500200	500	200	1000	800
PETFR11500225	500	225	1000	800
PETFR11500250	500	250	1000	900
PETFR11500280	500	280	1000	900
PETFR11500315	500	315	1000	900
PETFR11500355	500	355	1000	900
PETFR11560200	560	200	1000	900
PETFR11560225	560	225	1000	900
PETFR11560250	560	250	1000	900
PETFR11560280	560	280	1000	1200
PETFR11560315	560	315	1000	1200
PETFR11560355	560	355	1000	1200
PETFR11630160	630	160	1000	1200
PETFR11630200	630	200	1000	1200
PETFR11630225	630	225	1000	1200
PETFR11630250	630	250	1000	1200
PETFR11630280	630	280	1000	1200
PETFR11630315	630	315	1100	1200
PETFR11630355	630	355	1100	1200
PETFR11630400	630	400	1200	1200
PETFR11630450	630	450	1200	1200

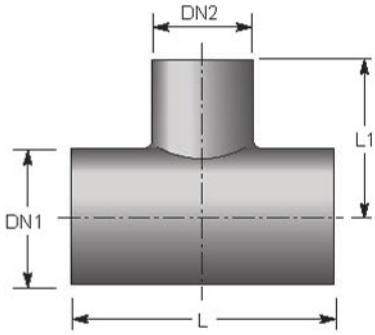

Note:
- Sizes from DN1200mm to 2000mm are made to order. Please contact Iplex Pipelines.
- These fittings are subject to pressure de-rating. Please refer to www.pipa.com.au for details.
- EF coupling (EG07) required for electrofusion for branch only if required.
- Multiple suppliers products can be stocked, all dimensions, masses & volumes are approximate only. If critical contact Iplex Pipelines.
- Main branches can be maufactured to suit electrofusion at a higher cost and with different dimensions.

Fabricated Reducing Tees
(Electrofusion and Butt Welding suitable on branch only, Mainline Butt Weld only) Continued...

PE100 SDR11:

Iplex code	Typical dimensions			
	Nominal diameter DN1 (mm)	Nominal diameter DN2 (mm)	Dim. (mm) L	Dim. (mm) L1
PETFR11710200	710	200	1100	1200
PETFR11710225	710	225	1100	1200
PETFR11710250	710	250	1100	1200
PETFR11710280	710	280	1200	1200
PETFR11710315	710	315	1200	1200
PETFR11710355	710	355	1200	1200
PETFR11710400	710	400	1300	1500
PETFR11710450	710	450	1300	1500
PETFR11710500	710	500	1300	1500
PETFR11800200	800	200	1100	1200
PETFR11800225	800	225	1100	1200
PETFR11800250	800	250	1200	1200
PETFR11800280	800	280	1200	1200
PETFR11800315	800	315	1200	1200
PETFR11800355	800	355	1300	1200
PETFR11800400	800	400	1300	1600
PETFR11800450	800	450	1400	1600
PETFR11800500	800	500	1400	1600
PETFR11800560	800	560	1500	1600
PETFR111000200	1000	200	1400	1200
PETFR111000225	1000	225	1400	1200
PETFR111000250	1000	250	1400	1200
PETFR111000280	1000	280	1400	1200
PETFR111000315	1000	315	1500	1200
PETFR111000355	1000	355	1500	1200
PETFR111000400	1000	400	1500	1700
PETFR111000450	1000	450	1600	1700
PETFR111000500	1000	500	1600	1700
PETFR111000560	1000	560	1700	1700
PETFR111000630	1000	630	1700	1700
PETFR111200250	1200	250	1500	1300
PETFR111200280	1200	280	1500	1300
PETFR111200315	1200	315	1600	1300
PETFR111200355	1200	355	1600	1300
PETFR111200400	1200	400	1700	1800
PETFR111200450	1200	450	1700	1800
PETFR111200500	1200	500	1800	1800
PETFR111200560	1200	560	1800	1800
PETFR111200630	1200	630	1800	1800

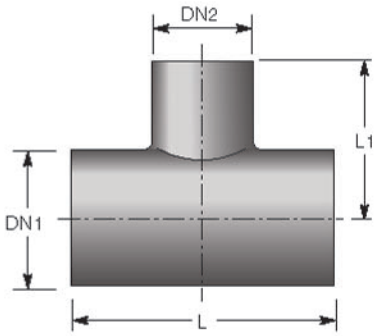

Note:
- Sizes from DN1200mm to 2000mm are made to order. Please contact Iplex Pipelines.
- These fittings are subject to pressure de-rating. Please refer to www.pipa.com.au for details.
- EF coupling (EG07) required for electrofusion for branch only if required.
- Multiple suppliers products can be stocked, all dimensions, masses & volumes are approximate only. If critical contact Iplex Pipelines.
- Main branches can be maufactured to suit electrofusion at a higher cost and with different dimensions.

Long Spigot Reduced Moulded Tees (Suitable for Electrofusion and Butt Welding)

PE100 SDR17:

Iplex code	Typical dimensions			
	Nominal diameter DN1 (mm)	Nominal diameter DN2 (mm)	Dim. (mm) L	Dim. (mm) L1
PETR17063050LS	63	50	215	103
PETR17075032LS	75	32	256	108
PETR17075050LS	75	50	253	113
PETR17075063LS	75	63	255	117
PETR17090050LS	90	50	280	117
PETR17090063LS	90	63	280	123
PETR17090075LS	90	75	272	138
PETR17110063LS	110	63	320	147
PETR17110075LS	110	75	309	151
PETR17110090LS	110	90	320	158
PETR17125090LS	125	90	340	170
PETR17125110LS	125	110	341	170
PETR17160063LS	160	63	343	176
PETR17160075LS	160	75	343	180
PETR17160090LS	160	90	412	188
PETR17160110LS	160	110	412	195
PETR17180090LS	180	90	420	200
PETR17180110LS	180	110	430	206
PETR17180160LS	180	160	411	205
PETR17200063LS	200	63	500	190
PETR17200090LS	200	90	500	207
PETR17200110LS	200	110	500	215
PETR17200160LS	200	160	500	234
PETR17225075LS	225	75	555	215
PETR17225090LS	225	90	558	226
PETR17225110LS	225	110	558	235
PETR17225160LS	225	160	560	253
PETR17225180LS	225	180	560	280
PETR17250110LS	250	110	575	242
PETR17250160LS	250	160	575	261
PETR17315110LS	315	110	695	277
PETR17315160LS	315	160	695	296
PETR17315225LS	315	225	650	335
PETR17315250LS	315	250	695	325

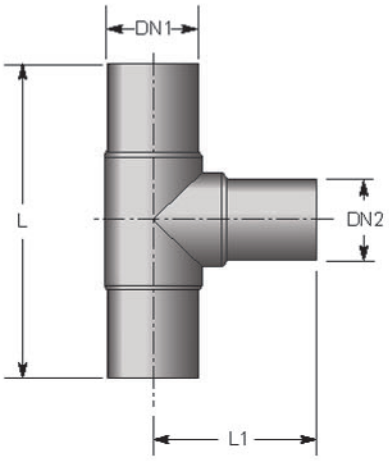

Note:
- EF coupling (EG07) required for electrofusion.
- Multiple suppliers products can be stocked, all dimensions, masses & volumes are approximate only. If critical contact Iplex Pipelines.

Long Spigot Reduced Moulded Tees (Suitable for Electrofusion and Butt Welding)

PE100 SDR11:

Iplex code	Typical dimensions			
	Nominal diameter DN1 (mm)	Nominal diameter DN2 (mm)	Dim. (mm) L	Dim. (mm) L1
PETR11063050LS	63	50	215	103
PETR11075032LS	75	32	256	108
PETR11075050LS	75	50	253	113
PETR11075063LS	75	63	255	117
PETR11090050LS	90	50	280	117
PETR11090063LS	90	63	280	123
PETR11090075LS	90	75	272	138
PETR11110063LS	110	63	320	147
PETR11110075LS	110	75	309	151
PETR11110090LS	110	90	320	158
PETR11125090LS	125	90	340	170
PETR11125110LS	125	110	341	170
PETR11160063LS	160	63	343	176
PETR11160075LS	160	75	343	180
PETR11160090LS	160	90	412	188
PETR11160110LS	160	110	412	195
PETR11180090LS	180	90	420	200
PETR11180110LS	180	110	430	206
PETR11180160LS	180	160	411	205
PETR11200063LS	200	63	500	190
PETR11200090LS	200	90	500	207
PETR11200110LS	200	110	500	215
PETR11200160LS	200	160	500	234
PETR11225075LS	225	75	555	215
PETR11225090LS	225	90	558	226
PETR11225110LS	225	110	558	235
PETR11225160LS	225	160	560	253
PETR11225180LS	225	180	560	280
PETR11250110LS	250	110	575	242
PETR11250160LS	250	160	575	261
PETR11315110LS	315	110	695	277
PETR11315160LS	315	160	695	296
PETR11315225LS	315	225	650	335
PETR11315250LS	315	250	695	325

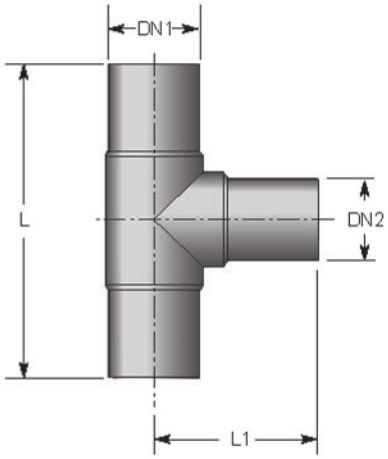

Note:
- EF coupling (EG07) required for electrofusion.
- Multiple suppliers products can be stocked, all dimensions, masses & volumes are approximate only. If critical contact Iplex Pipelines.

Concentric Reducers (Suitable for Butt Welding only)

PE100 SDR17:

Iplex code	Typical dimensions		
	Nominal diameter DN1 (mm)	Nominal diameter DN2 (mm)	Dim. (mm) L
PER17110050	110	50	90
PER17110063	110	63	105
PER17110075	110	75	95
PER17110090	110	90	100
PER17125063	125	63	120
PER17125075	125	75	100
PER17125090	125	90	110
PER17125110	125	110	102
PER17140075	140	75	110
PER17140090	140	90	110
PER17140110	140	110	110
PER17140125	140	125	110
PER17160090	160	90	140
PER17160110	160	110	128
PER17160125	160	125	122
PER17160140	160	140	120
PER17180090	180	90	143
PER17180110	180	110	130
PER17180125	180	125	143
PER17180140	180	140	130
PER17180160	180	160	130
PER17200090	200	90	120
PER17200110	200	110	120
PER17200125	200	125	120
PER17200140	200	140	120
PER17200160	200	160	120
PER17200180	200	180	120
PER17225090	225	90	120
PER17225110	225	110	120
PER17225125	225	125	120
PER17225140	225	140	115
PER17225160	225	160	115
PER17225180	225	180	115
PER17225200	225	200	115
PER17250090	250	90	120
PER17250110	250	110	120
PER17250125	250	125	120
PER17250140	250	140	115
PER17250160	250	160	115
PER17250180	250	180	115
PER17250200	250	200	115
PER17250225	250	225	115
PER17280090	280	90	120
PER17280110	280	110	120
PER17280125	280	125	120
PER17280140	280	140	115
PER17280160	280	160	115

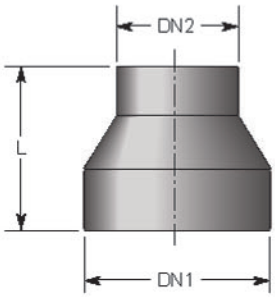

Note:
- Multiple suppliers products can be stocked, all dimensions, masses & volumes are approximate only. If critical contact Iplex Pipelines.
- Other sizes and SDR's are available and can be made to order, subject to minimum order quantities.

Concentric Reducers (Suitable for Butt Welding only) Continued...

PE100 SDR17:

Iplex code	Typical dimensions		
	Nominal diameter DN1 (mm)	Nominal diameter DN2 (mm)	Dim. (mm) L
PER17280180	280	180	115
PER17280200	280	200	115
PER17280225	280	225	115
PER17280250	280	250	115
PER17315090	315	90	120
PER17315110	315	110	120
PER17315125	315	125	120
PER17315140	315	140	120
PER17315160	315	160	120
PER17315180	315	180	120
PER17315200	315	200	120
PER17315225	315	225	120
PER17315250	315	250	120
PER17315280	315	280	120
PER17355090	355	90	120
PER17355110	355	110	120
PER17355125	355	125	120
PER17355140	355	140	120
PER17355160	355	160	120
PER17355180	355	180	120
PER17355200	355	200	120
PER17355225	355	225	120
PER17355250	355	250	120
PER17355280	355	280	120
PER17355315	355	315	120
PER17400160	400	160	125
PER17400180	400	180	125
PER17400225	400	225	125
PER17400250	400	250	125
PER17400280	400	280	125
PER17400315	400	315	125
PER17400355	400	355	125
PER17450160	450	160	125
PER17450180	450	180	125
PER17450200	450	200	125
PER17450225	450	225	125
PER17450250	450	250	125
PER17450280	450	280	125
PER17450315	450	315	125
PER17450355	450	355	125
PER17450400	450	400	125
PER17500200	500	200	125
PER17500225	500	225	125
PER17500250	500	250	125
PER17500280	500	280	125
PER17500315	500	315	125
PER17500355	500	355	125
PER17500400	500	400	125
PER17500450	500	450	125
PER17560250	560	250	125
PER17560280	560	280	125
PER17560315	560	315	125
PER17560355	560	355	125
PER17560400	560	400	125
PER17560450	560	450	125
PER17560500	560	500	125
PER17630250	630	250	125
PER17630280	630	280	125
PER17630315	630	315	125

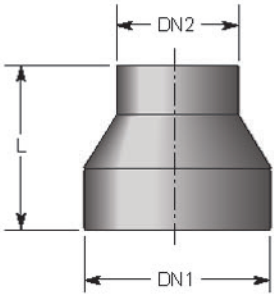

Note:
- Multiple suppliers products can be stocked, all dimensions, masses & volumes are approximate only. If critical contact Iplex Pipelines.
- Other sizes and SDR's are available and can be made to order, subject to minimum order quantities.

Concentric Reducers (Suitable for Butt Welding only) Continued...

PE100 SDR17:

Iplex code	Typical dimensions		
	Nominal diameter DN1 (mm)	Nominal diameter DN2 (mm)	Dim. (mm) L
PER17630355	630	355	125
PER17630400	630	400	125
PER17630450	630	450	125
PER17630500	630	500	125
PER17630560	630	560	125
PER17710355	710	355	125
PER17710400	710	400	125
PER17710450	710	450	125
PER17710500	710	500	125
PER17710560	710	560	125
PER17710630	710	630	125
PER17800400	800	400	125
PER17800450	800	450	125
PER17800500	800	500	125
PER17800560	800	560	125
PER17800630	800	630	125
PER17800710	800	710	125
PER171000500	1000	500	125
PER171000560	1000	560	125
PER171000630	1000	630	125
PER171000710	1000	710	125
PER171000800	1000	800	125
PER171000900	1000	900	125
PER171200630	1200	630	130
PER171200710	1200	710	130
PER171200800	1200	800	130
PER171200900	1200	900	130
PER1712001000	1200	1000	130

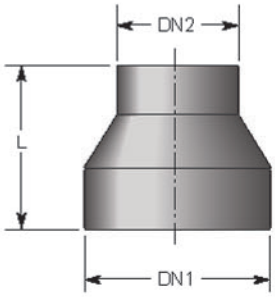

Note:
- Multiple suppliers products can be stocked, all dimensions, masses & volumes are approximate only. If critical contact Iplex Pipelines.
- Other sizes and SDR's are available and can be made to order, subject to minimum order quantities.

Concentric Reducers (Suitable for Butt Welding only)

PE100 SDR11:

Iplex code	Typical dimensions		
	Nominal diameter DN1 (mm)	Nominal diameter DN2 (mm)	Dim. (mm) L
PER11110050	110	50	90
PER11110063	110	63	105
PER11110075	110	75	95
PER11110090	110	90	100
PER11125063	125	63	120
PER11125075	125	75	100
PER11125090	125	90	110
PER11125110	125	110	102
PER11140075	140	75	110
PER11140090	140	90	110
PER11140110	140	110	110
PER11140125	140	125	110
PER11160090	160	90	140
PER11160110	160	110	128
PER11160125	160	125	122
PER11160140	160	140	120
PER11180090	180	90	143
PER11180110	180	110	130
PER11180125	180	125	143
PER11180140	180	140	130
PER11180160	180	160	130
PER11200090	200	90	120
PER11200110	200	110	120
PER11200125	200	125	120
PER11200140	200	140	120
PER11200160	200	160	120
PER11200180	200	180	120
PER11225090	225	90	120
PER11225110	225	110	120
PER11225125	225	125	120
PER11225140	225	140	115
PER11225160	225	160	115
PER11225180	225	180	115
PER11225200	225	200	115
PER11250090	250	90	120
PER11250110	250	110	120
PER11250125	250	125	120
PER11250140	250	140	115
PER11250160	250	160	115
PER11250180	250	180	115
PER11250200	250	200	115
PER11250225	250	225	115
PER11280090	280	90	120
PER11280110	280	110	120
PER11280125	280	125	120
PER11280140	280	140	115
PER11280160	280	160	115

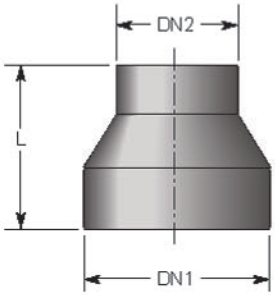

Note:
- Multiple suppliers products can be stocked, all dimensions, masses & volumes are approximate only. If critical contact Iplex Pipelines.
- Other sizes and SDR's are available and can be made to order, subject to minimum order quantities.

Concentric Reducers (Suitable for Butt Welding only) Continued...

PE100 SDR11:

Iplex code	Typical dimensions		
	Nominal diameter DN1 (mm)	Nominal diameter DN2 (mm)	Dim. (mm) L
PER11280180	280	180	115
PER11280200	280	200	115
PER11280225	280	225	115
PER11280250	280	250	115
PER11315090	315	90	120
PER11315110	315	110	120
PER11315125	315	125	120
PER11315140	315	140	120
PER11315160	315	160	120
PER11315180	315	180	120
PER11315200	315	200	120
PER11315225	315	225	120
PER11315250	315	250	120
PER11315280	315	280	120
PER11355090	355	90	120
PER11355110	355	110	120
PER11355125	355	125	120
PER11355140	355	140	120
PER11355160	355	160	120
PER11355180	355	180	120
PER11355200	355	200	120
PER11355225	355	225	120
PER11355250	355	250	120
PER11355280	355	280	120
PER11355315	355	315	120
PER11400160	400	160	125
PER11400180	400	180	125
PER11400225	400	225	125
PER11400250	400	250	125
PER11400280	400	280	125
PER11400315	400	315	125
PER11400355	400	355	125
PER11450160	450	160	125
PER11450180	450	180	125
PER11450200	450	200	125
PER11450225	450	225	125
PER11450250	450	250	125
PER11450280	450	280	125
PER11450315	450	315	125
PER11450355	450	355	125
PER11450400	450	400	125
PER11500200	500	200	125
PER11500225	500	225	125
PER11500250	500	250	125
PER11500280	500	280	125
PER11500315	500	315	125
PER11500355	500	355	125
PER11500400	500	400	125
PER11500450	500	450	125
PER11560250	560	250	125
PER11560280	560	280	125
PER11560315	560	315	125
PER11560355	560	355	125
PER11560400	560	400	125
PER11560450	560	450	125
PER11560500	560	500	125
PER11630250	630	250	125
PER11630280	630	280	125
PER11630315	630	315	125

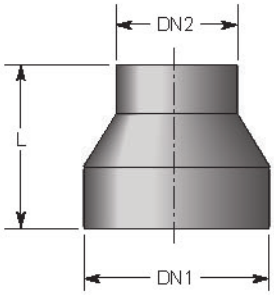

Note:
- Multiple suppliers products can be stocked, all dimensions, masses & volumes are approximate only. If critical contact Iplex Pipelines.
- Other sizes and SDR's are available and can be made to order, subject to minimum order quantities.

Concentric Reducers (Suitable for Butt Welding only) Continued...

PE100 SDR11:

Iplex code	Typical dimensions		
	Nominal diameter DN1 (mm)	Nominal diameter DN2 (mm)	Dim. (mm) L
PER11630355	630	355	125
PER11630400	630	400	125
PER11630450	630	450	125
PER11630500	630	500	125
PER11630560	630	560	125
PER11710355	710	355	125
PER11710400	710	400	125
PER11710450	710	450	125
PER11710500	710	500	125
PER11710560	710	560	125
PER11710630	710	630	125
PER11800400	800	400	125
PER11800450	800	450	125
PER11800500	800	500	125
PER11800560	800	560	125
PER11800630	800	630	125
PER11800710	800	710	125
PER111000500	1000	500	125
PER111000560	1000	560	125
PER111000630	1000	630	125
PER111000710	1000	710	125
PER111000800	1000	800	125
PER111000900	1000	900	125
PER111200630	1200	630	130
PER111200710	1200	710	130
PER111200800	1200	800	130
PER111200900	1200	900	130
PER1112001000	1200	1000	130

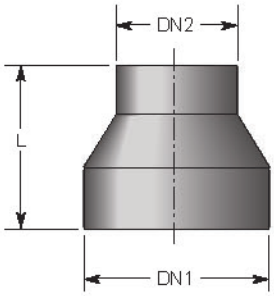

Note:
- Multiple suppliers products can be stocked, all dimensions, masses & volumes are approximate only. If critical contact Iplex Pipelines.
- Other sizes and SDR's are available and can be made to order, subject to minimum order quantities.

Eccentric Reducers (Suitable for Butt Welding only)

PE100 SDR17:

Iplex code	Typical dimensions		
	Nominal diameter DN1 (mm)	Nominal diameter DN2 (mm)	Dim. (mm) L
PEER17050025	50	25	100
PEER17050032	50	32	100
PEER17050040	50	40	100
PEER17063032	63	32	100
PEER17063040	63	40	100
PEER17063050	63	50	100
PEER17075040	75	40	100
PEER17075050	75	50	100
PEER17075063	75	63	100
PEER17090040	90	40	100
PEER17090050	90	50	100
PEER17090063	90	63	100
PEER17090075	90	75	100
PEER17110050	110	50	100
PEER17110063	110	63	100
PEER17110075	110	75	100
PEER17110090	110	90	100
PEER17125050	125	50	100
PEER17125063	125	63	100
PEER17125075	125	75	100
PEER17125090	125	90	100
PEER17125110	125	110	100
PEER17140050	140	50	100
PEER17140063	140	63	100
PEER17140075	140	75	100
PEER17140090	140	90	100
PEER17140110	140	110	100
PEER17140125	140	125	100
PEER17160050	160	50	110
PEER17160063	160	63	110
PEER17160075	160	75	110
PEER17160090	160	90	110
PEER17160110	160	110	110
PEER17160125	160	125	110
PEER17160140	160	140	110
PEER17180090	180	90	110
PEER17180110	180	110	110
PEER17180125	180	125	110
PEER17180140	180	140	110
PEER17180160	180	160	110
PEER17200050	200	50	115
PEER17200063	200	63	115
PEER17200075	200	75	115
PEER17200090	200	90	115
PEER17200110	200	110	115
PEER17200125	200	125	115
PEER17200140	200	140	115
PEER17200160	200	160	115
PEER17200180	200	180	115
PEER17225090	225	90	115
PEER17225110	225	110	115
PEER17225125	225	125	115
PEER17225140	225	140	115
PEER17225160	225	160	115
PEER17225180	225	180	115
PEER17225200	225	200	115

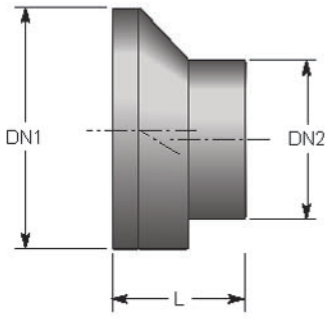

Note:

- These fittings require specialist welding techniques.
- Multiple suppliers products can be stocked, all dimensions, masses & volumes are approximate only. If critical contact Iplex Pipelines.
- Fittings can be supplied spigotted for electrofusion upon request.
- Other sizes and SDR's are available and can be made to order, subject to minimum order quantities.

Eccentric Reducers (Suitable for Butt Welding only) Continued...

PE100 SDR17:

Iplex Code	Typical Dimensions		
	Nominal Diameter DN1 (mm)	Nominal Diameter DN2 (mm)	Dim. (mm) L
PEER17250090	250	90	115
PEER17250110	250	110	115
PEER17250125	250	125	120
PEER17250140	250	140	120
PEER17250160	250	160	120
PEER17250180	250	180	120
PEER17250200	250	200	120
PEER17250225	250	225	120
PEER17280090	280	90	120
PEER17280110	280	110	120
PEER17280125	280	125	120
PEER17280140	280	140	120
PEER17280160	280	160	120
PEER17280180	280	180	120
PEER17280200	280	200	120
PEER17280225	280	225	120
PEER17280250	280	250	120
PEER17315090	315	90	120
PEER17315110	315	110	120
PEER17315125	315	125	120
PEER17315140	315	140	120
PEER17315160	315	160	120
PEER17315180	315	180	120
PEER17315200	315	200	120
PEER17315225	315	225	120
PEER17315250	315	250	120
PEER17315280	315	280	120
PEER17355090	355	90	125
PEER17355110	355	110	125
PEER17355125	355	125	125
PEER17355140	355	140	125
PEER17355160	355	160	125
PEER17355180	355	180	125
PEER17355200	355	200	125
PEER17355225	355	225	125
PEER17355250	355	250	125
PEER17355280	355	280	125
PEER17355315	355	315	125
PEER17400090	400	90	130
PEER17400110	400	110	130
PEER17400125	400	125	130
PEER17400140	400	140	130
PEER17400160	400	160	130
PEER17400180	400	180	130
PEER17400200	400	200	130
PEER17400225	400	225	130
PEER17400250	400	250	130
PEER17400280	400	280	130
PEER17400315	400	315	130
PEER17400355	400	355	130
PEER17450200	450	200	135
PEER17450225	450	225	135
PEER17450250	450	250	135
PEER17450280	450	280	135
PEER17450315	450	315	135
PEER17450355	450	355	135

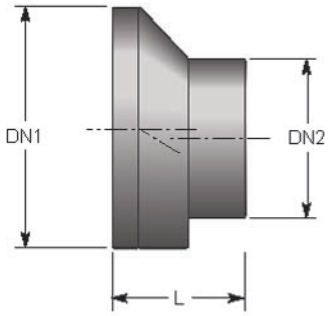

Note:

- These fittings require specialist welding techniques.
- Multiple suppliers products can be stocked, all dimensions, masses & volumes are approximate only. If critical contact Iplex Pipelines.
- Fittings can be supplied spigotted for electrofusion upon request.
- Other sizes and SDR's are available and can be made to order, subject to minimum order quantities.

Eccentric Reducers (Suitable for Butt Welding only) Continued...

PE100 SDR17:

Iplex code	Typical dimensions		
	Nominal diameter DN1 (mm)	Nominal diameter DN2 (mm)	Dim. (mm) L
PEER17500250	500	250	145
PEER17500280	500	280	145
PEER17500315	500	315	145
PEER17500355	500	355	145
PEER17500400	500	400	145
PEER17500450	500	450	145
PEER17560250	560	250	145
PEER17560280	560	280	145
PEER17560315	560	315	145
PEER17560355	560	355	145
PEER17560400	560	400	145
PEER17560450	560	450	145
PEER17560500	560	500	145
PEER17630250	630	250	145
PEER17630280	630	280	145
PEER17630315	630	315	145
PEER17630355	630	355	145
PEER17630400	630	400	145
PEER17630450	630	450	145
PEER17630500	630	500	145
PEER17630560	630	560	145
PEER17710355	710	355	145
PEER17710400	710	400	145
PEER17710450	710	450	145
PEER17710500	710	500	145
PEER17710560	710	560	145
PEER17710630	710	630	145
PEER17800400	800	400	145
PEER17800450	800	450	145
PEER17800500	800	500	145
PEER17800560	800	560	145
PEER17800630	800	630	145
PEER17800710	800	710	145
PEER171000500	1000	500	145
PEER171000560	1000	560	145
PEER171000630	1000	630	145
PEER171000710	1000	710	145
PEER171000800	1000	800	145
PEER171000900	1000	900	145
PEER171200630	1200	630	150
PEER171200710	1200	710	150
PEER171200800	1200	800	150
PEER171200900	1200	900	150
PEER1712001000	1200	1000	150

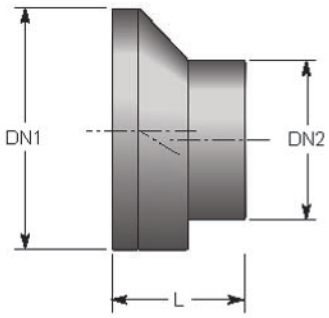

Note:

- These fittings require specialist welding techniques.
- Multiple suppliers products can be stocked, all dimensions, masses & volumes are approximate only. If critical contact Iplex Pipelines.
- Fittings can be supplied spigotted for electrofusion upon request.
- Other sizes and SDR's are available and can be made to order, subject to minimum order quantities.

Eccentric Reducers (Suitable for Butt Welding only)

PE100 SDR11:

Iplex code	Typical dimensions		
	Nominal diameter DN1 (mm)	Nominal diameter DN2 (mm)	Dim. (mm) L
PEER11050025	50	25	100
PEER11050032	50	32	100
PEER11050040	50	40	100
PEER11063032	63	32	100
PEER11063040	63	40	100
PEER11063050	63	50	100
PEER11075040	75	40	100
PEER11075050	75	50	100
PEER11075063	75	63	100
PEER11090040	90	40	100
PEER11090050	90	50	100
PEER11090063	90	63	100
PEER11090075	90	75	100
PEER11110050	110	50	100
PEER11110063	110	63	100
PEER11110075	110	75	100
PEER11110090	110	90	100
PEER11125050	125	50	100
PEER11125063	125	63	100
PEER11125075	125	75	100
PEER11125090	125	90	100
PEER11125110	125	110	100
PEER11140050	140	50	100
PEER11140063	140	63	100
PEER11140075	140	75	100
PEER11140090	140	90	100
PEER11140110	140	110	100
PEER11140125	140	125	100
PEER11160050	160	50	110
PEER11160063	160	63	110
PEER11160075	160	75	110
PEER11160090	160	90	110
PEER11160110	160	110	110
PEER11160125	160	125	110
PEER11160140	160	140	110
PEER11180090	180	90	110
PEER11180110	180	110	110
PEER11180125	180	125	110
PEER11180140	180	140	110
PEER11180160	180	160	110
PEER11200050	200	50	115
PEER11200063	200	63	115
PEER11200075	200	75	115
PEER11200090	200	90	115
PEER11200110	200	110	115
PEER11200125	200	125	115
PEER11200140	200	140	115
PEER11200160	200	160	115
PEER11200180	200	180	115
PEER11225090	225	90	115
PEER11225110	225	110	115
PEER11225125	225	125	115
PEER11225140	225	140	115
PEER11225160	225	160	115
PEER11225180	225	180	115
PEER11225200	225	200	115

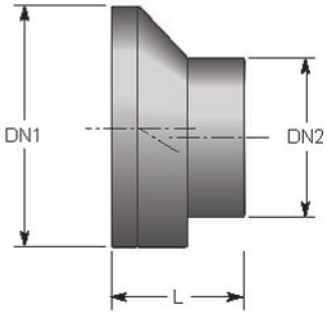

Note:

- These fittings require specialist welding techniques.
- Multiple suppliers products can be stocked, all dimensions, masses & volumes are approximate only. If critical contact Iplex Pipelines.
- Fittings can be supplied spigotted for electrofusion upon request.
- Other sizes and SDR's are available and can be made to order, subject to minimum order quantities.

Eccentric Reducers (Suitable for Butt Welding only) Continued...

PE100 SDR11:

Iplex Code	Typical Dimensions		
	Nominal Diameter DN1 (mm)	Nominal Diameter DN2 (mm)	Dim. (mm) L
PEER11250090	250	90	115
PEER11250110	250	110	115
PEER11250125	250	125	120
PEER11250140	250	140	120
PEER11250160	250	160	120
PEER11250180	250	180	120
PEER11250200	250	200	120
PEER11250225	250	225	120
PEER11280090	280	90	120
PEER11280110	280	110	120
PEER11280125	280	125	120
PEER11280140	280	140	120
PEER11280160	280	160	120
PEER11280180	280	180	120
PEER11280200	280	200	120
PEER11280225	280	225	120
PEER11280250	280	250	120
PEER11315090	315	90	120
PEER11315110	315	110	120
PEER11315125	315	125	120
PEER11315140	315	140	120
PEER11315160	315	160	120
PEER11315180	315	180	120
PEER11315200	315	200	120
PEER11315225	315	225	120
PEER11315250	315	250	120
PEER11315280	315	280	120
PEER11355090	355	90	125
PEER11355110	355	110	125
PEER11355125	355	125	125
PEER11355140	355	140	125
PEER11355160	355	160	125
PEER11355180	355	180	125
PEER11355200	355	200	125
PEER11355225	355	225	125
PEER11355250	355	250	125
PEER11355280	355	280	125
PEER11355315	355	315	125
PEER11400090	400	90	130
PEER11400110	400	110	130
PEER11400125	400	125	130
PEER11400140	400	140	130
PEER11400160	400	160	130
PEER11400180	400	180	130
PEER11400200	400	200	130
PEER11400225	400	225	130
PEER11400250	400	250	130
PEER11400280	400	280	130
PEER11400315	400	315	130
PEER11400355	400	355	130
PEER11450200	450	200	135
PEER11450225	450	225	135
PEER11450250	450	250	135
PEER11450280	450	280	135
PEER11450315	450	315	135
PEER11450355	450	355	135

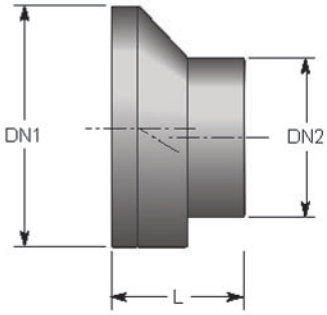

Note:

- These fittings require specialist welding techniques.
- Multiple suppliers products can be stocked, all dimensions, masses & volumes are approximate only. If critical contact Iplex Pipelines.
- Fittings can be supplied spigotted for electrofusion upon request.
- Other sizes and SDR's are available and can be made to order, subject to minimum order quantities.

Eccentric Reducers (Suitable for Butt Welding only) Continued...

PE100 SDR11:

Iplex code	Typical dimensions		
	Nominal diameter DN1 (mm)	Nominal diameter DN2 (mm)	Dim. (mm) L
PEER11500250	500	250	145
PEER11500280	500	280	145
PEER11500315	500	315	145
PEER11500355	500	355	145
PEER11500400	500	400	145
PEER11500450	500	450	145
PEER11560250	560	250	145
PEER11560280	560	280	145
PEER11560315	560	315	145
PEER11560355	560	355	145
PEER11560400	560	400	145
PEER11560450	560	450	145
PEER11560500	560	500	145
PEER11630250	630	250	145
PEER11630280	630	280	145
PEER11630315	630	315	145
PEER11630355	630	355	145
PEER11630400	630	400	145
PEER11630450	630	450	145
PEER11630500	630	500	145
PEER11630560	630	560	145
PEER11710355	710	355	145
PEER11710400	710	400	145
PEER11710450	710	450	145
PEER11710500	710	500	145
PEER11710560	710	560	145
PEER11710630	710	630	145
PEER11800400	800	400	145
PEER11800450	800	450	145
PEER11800500	800	500	145
PEER11800560	800	560	145
PEER11800630	800	630	145
PEER11800710	800	710	145
PEER111000500	1000	500	145
PEER111000560	1000	560	145
PEER111000630	1000	630	145
PEER111000710	1000	710	145
PEER111000800	1000	800	145
PEER111000900	1000	900	145
PEER111200630	1200	630	150
PEER111200710	1200	710	150
PEER111200800	1200	800	150
PEER111200900	1200	900	150
PEER1112001000	1200	1000	150

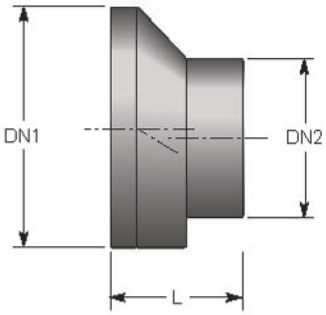

Note:

- These fittings require specialist welding techniques.
- Multiple suppliers products can be stocked, all dimensions, masses & volumes are approximate only. If critical contact Iplex Pipelines.
- Fittings can be supplied spigotted for electrofusion upon request.
- Other sizes and SDR's are available and can be made to order, subject to minimum order quantities.

Long Spigot Concentric Reducers (Suitable for Electrofusion and Butt Welding)

PE100 SDR17:

Iplex code	Typical dimensions		
	Nominal diameter DN1 (mm)	Nominal diameter DN2 (mm)	Dim. (mm) L
PER17025020LS	25	20	115
PER17032020LS	32	20	120
PER17032025LS	32	25	120
PER17040020LS	40	20	129
PER17040025LS	40	25	129
PER17040032LS	40	32	129
PER17050020LS	50	20	149
PER17050025LS	50	25	139
PER17050032LS	50	32	140
PER17050040LS	50	40	139
PER17063032LS	63	32	149
PER17063040LS	63	40	150
PER17063050LS	63	50	150
PER17075040LS	75	40	170
PER17075050LS	75	50	170
PER17075063LS	75	63	170
PER17090050LS	90	50	190
PER17090063LS	90	63	190
PER17090075LS	90	75	190
PER17110063LS	110	63	205
PER17110075LS	110	75	205
PER17110090LS	110	90	205
PER17125063LS	125	63	214
PER17125075LS	125	75	210
PER17125090LS	125	90	212
PER17125110LS	125	110	212
PER17140075LS	140	75	230
PER17140090LS	140	90	230
PER17140110LS	140	110	234
PER17140125LS	140	125	235
PER17160090LS	160	90	244
PER17160110LS	160	110	244
PER17160125LS	160	125	245
PER17160140LS	160	140	260
PER17180090LS	180	90	245
PER17180110LS	180	110	270
PER17180125LS	180	125	258
PER17180140LS	180	140	270
PER17180160LS	180	160	255
PER17200140LS	200	140	275
PER17200160LS	200	160	265
PER17200180LS	200	180	265

Iplex code	Typical dimensions		
	Nominal diameter DN1 (mm)	Nominal diameter DN2 (mm)	Dim. (mm) L
PER17225140LS	225	140	295
PER17225160LS	225	160	279
PER17225180LS	225	180	280
PER17225200LS	225	200	280
PER17250160LS	250	160	300
PER17250180LS	250	180	295
PER17250200LS	250	200	315
PER17250225LS	250	225	332
PER17280200LS	280	200	333
PER17280225LS	280	225	335
PER17280250LS	280	250	340
PER17315200LS	315	200	380
PER17315225LS	315	225	365
PER17315250LS	315	250	365
PER17315280LS	315	280	365
PER17355250LS	355	250	390
PER17355280LS	355	280	390
PER17355315LS	355	315	390
PER17400280LS	400	280	415
PER17400315LS	400	315	415
PER17400355LS	400	355	420
PER17450280LS	450	280	389
PER17450315LS	450	315	390
PER17450355LS	450	355	393
PER17450400LS	450	400	395
PER17500315LS	500	315	422
PER17500355LS	500	355	424
PER17500400LS	500	400	426
PER17500450LS	500	450	428
PER17560355LS	560	355	459
PER17560400LS	560	400	461
PER17560450LS	560	450	463
PER17560500LS	560	500	466
PER17630400LS	630	400	502
PER17630450LS	630	450	503
PER17630500LS	630	500	506
PER17630560LS	630	560	506

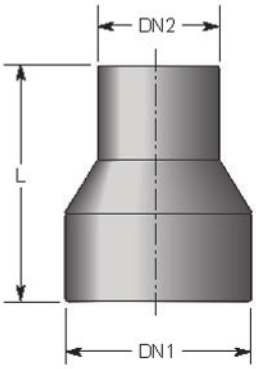

Note:

- EF coupling (EG07) required for electrofusion.
- Multiple suppliers products can be stocked, all dimensions, masses & volumes are approximate only. If critical contact Iplex Pipelines.
- Other sizes (up to 1200mm) and SDR's are available and can be made to order, subject to minimum order quantities.

Long Spigot Concentric Reducers (Suitable for Electrofusion and Butt Welding)

PE100 SDR11:

Iplex code	Typical dimensions		
	Nominal diameter DN1 (mm)	Nominal diameter DN2 (mm)	Dim. (mm) L
PER11025020LS	25	20	115
PER11032020LS	32	20	120
PER11032025LS	32	25	120
PER11040020LS	40	20	129
PER11040025LS	40	25	129
PER11040032LS	40	32	129
PER11050020LS	50	20	149
PER11050025LS	50	25	139
PER11050032LS	50	32	140
PER11050040LS	50	40	139
PER11063032LS	63	32	149
PER11063040LS	63	40	150
PER11063050LS	63	50	150
PER11075040LS	75	40	170
PER11075050LS	75	50	170
PER11075063LS	75	63	170
PER11090050LS	90	50	190
PER11090063LS	90	63	190
PER11090075LS	90	75	190
PER11110063LS	110	63	205
PER11110075LS	110	75	205
PER11110090LS	110	90	205
PER11125063LS	125	63	214
PER11125075LS	125	75	210
PER11125090LS	125	90	212
PER11125110LS	125	110	212
PER11140075LS	140	75	230
PER11140090LS	140	90	230
PER11140110LS	140	110	234
PER11140125LS	140	125	235
PER11160090LS	160	90	244
PER11160110LS	160	110	244
PER11160125LS	160	125	245
PER11160140LS	160	140	260
PER11180090LS	180	90	245
PER11180110LS	180	110	270
PER11180125LS	180	125	258
PER11180140LS	180	140	270
PER11180160LS	180	160	255
PER11200140LS	200	140	275
PER11200160LS	200	160	265
PER11200180LS	200	180	265

Iplex code	Typical dimensions		
	Nominal diameter DN1 (mm)	Nominal diameter DN2 (mm)	Dim. (mm) L
PER11225140LS	225	140	295
PER11225160LS	225	160	279
PER11225180LS	225	180	280
PER11225200LS	225	200	280
PER11250160LS	250	160	300
PER11250180LS	250	180	295
PER11250200LS	250	200	315
PER11250225LS	250	225	332
PER11280200LS	280	200	333
PER11280225LS	280	225	335
PER11280250LS	280	250	340
PER11315200LS	315	200	380
PER11315225LS	315	225	365
PER11315250LS	315	250	365
PER11315280LS	315	280	365
PER11355250LS	355	250	390
PER11355280LS	355	280	390
PER11355315LS	355	315	390
PER11400280LS	400	280	415
PER11400315LS	400	315	415
PER11400355LS	400	355	420
PER11450280LS	450	280	389
PER11450315LS	450	315	390
PER11450355LS	450	355	393
PER11450400LS	450	400	395
PER11500315LS	500	315	422
PER11500355LS	500	355	424
PER11500400LS	500	400	426
PER11500450LS	500	450	428
PER11560355LS	560	355	459
PER11560400LS	560	400	461
PER11560450LS	560	450	463
PER11560500LS	560	500	466
PER11630400LS	630	400	502
PER11630450LS	630	450	503
PER11630500LS	630	500	506
PER11630560LS	630	560	506

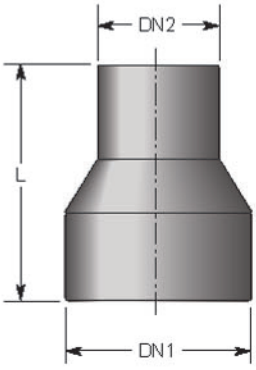

Note:

- EF coupling (EG07) required for electrofusion.
- Multiple suppliers products can be stocked, all dimensions, masses & volumes are approximate only. If critical contact Iplex Pipelines.
- Other sizes (up to 1200mm) and SDR's are available and can be made to order, subject to minimum order quantities.

End Caps Moulded (Suitable for Electrofusion and Butt Welding)

PE100 SDR17:

Iplex code	Typical dimensions	
	Nominal diameter DN (mm)	Dim. (mm) L
PEC17020LS	20	52
PEC17025LS	25	52
PEC17032LS	32	54
PEC17040LS	40	57
PEC17050LS	50	63
PEC17063LS	63	65
PEC17075LS	75	80
PEC17090LS	90	90
PEC17110LS	110	98
PEC17125LS	125	105
PEC17140LS	140	136
PEC17160LS	160	120
PEC17180LS	180	128
PEC17200LS	200	138
PEC17225LS	225	148
PEC17250LS	250	205
PEC17280LS	280	235
PEC17315LS	315	255
PEC17355LS	355	280
PEC17400LS	400	310

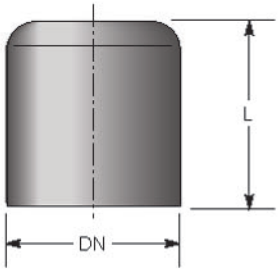

PE100 SDR11:

Iplex code	Typical dimensions	
	Nominal diameter DN (mm)	Dim. (mm) L
PEC11020LS	20	52
PEC11025LS	25	52
PEC11032LS	32	54
PEC11040LS	40	57
PEC11050LS	50	63
PEC11063LS	63	65
PEC11075LS	75	80
PEC11090LS	90	90
PEC11110LS	110	98
PEC11125LS	125	105
PEC11140LS	140	136
PEC11160LS	160	120
PEC11180LS	180	128
PEC11200LS	200	138
PEC11225LS	225	148
PEC11250LS	250	205
PEC11280LS	280	235
PEC11315LS	315	255
PEC11355LS	355	280
PEC11400LS	400	310

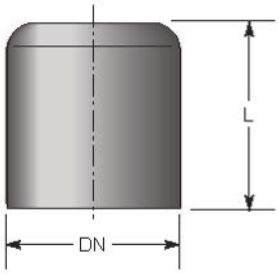

Note:
- EF coupling (EG07) required for electrofusion.
- Multiple suppliers products can be stocked, all dimensions, masses & volumes are approximate only. If critical contact Iplex Pipelines.
- Other sizes are available and can be made to order, subject to minimum order quantities.

End Caps (Suitable for Butt Welding only)

PE100 SDR17:

Iplex code	Typical dimensions	
	Nominal diameter DN (mm)	Dim. (mm) L
PEC17110	110	45
PEC17125	125	45
PEC17140	140	50
PEC17160	160	55
PEC17180	180	56
PEC17200	200	60
PEC17225	225	65
PEC17250	250	65
PEC17280	280	80
PEC17315	315	90
PEC17355	355	90
PEC17400	400	100
PEC17450	450	106
PEC17500	500	116
PEC17560	560	128
PEC17630	630	142
PEC17710	710	148
PEC17800	800	175
PEC17900	900	190
PEC171000	1000	210
PEC171200	1200	250

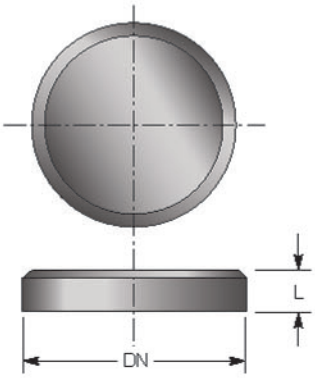

PE100 SDR11:

Iplex code	Typical dimensions	
	Nominal diameter DN (mm)	Dim. (mm) L
PEC11110	110	45
PEC11125	125	45
PEC11140	140	50
PEC11160	160	55
PEC11180	180	56
PEC11200	200	60
PEC11225	225	65
PEC11250	250	65
PEC11280	280	80
PEC11315	315	90
PEC11355	355	90
PEC11400	400	100
PEC11450	450	106
PEC11500	500	116
PEC11560	560	128
PEC11630	630	142
PEC11710	710	148
PEC11800	800	175
PEC11900	900	190
PEC111000	1000	210
PEC111200	1200	250

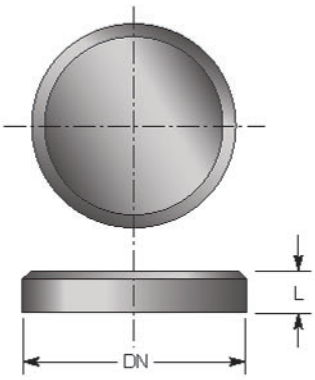

Note:
- Multiple suppliers products can be stocked, all dimensions, masses & volumes are approximate only. If critical contact Iplex Pipelines.

AVK Gate Valves

AVK Gate Valves Series 36/80:

Product code anti-clockwise closing	Product code clockwise closing	Typical dimensions		
		Nominal diameter DN (mm)	Dim. (mm) L	Dim. (mm) L1
C527.75PE	C527.75PEC	75	865	271
C527.90PE	C527.90PEC	90	950	342
C527.110PE	C527.110PEC	110	975	334
C527.125PE	C527.125PEC	125	1100	376
C527.140PE	C527.140PEC	140	1100	376
C527.160PE	C527.160PEC	160	1100	448
C527.180PE	C527.180PEC	180	1100	448
C527.200PE	C527.200PEC	200	1120	562
C527.225PE	C527.225PEC	225	1200	562
C527.250PE	C527.250PEC	250	1262	664
C527.280PE	C527.280PEC	280	1262	664
C527.315PE	C527.315PEC	315	1316	740

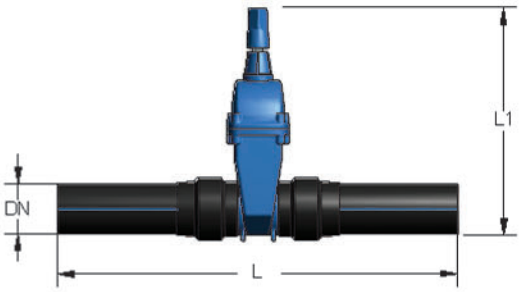

AVK Gate Valves Series 01/71:

Product code anti-clockwise closing	Product code clockwise closing	Typical dimensions		
		Nominal diameter DN (mm)	Dim. (mm) L	Dim. (mm) L1
C5261.90PE	C5261.90PEC	90	200	297
C5261.110PE	C5261.110PEC	110	208	334
C5261.125PE	C5261.125PEC	125	208	375
C5261.140PE	C5261.140PEC	140	220	375
C5261.160PE	C5261.160PEC	160	260	448
C5261.180PE	C5261.180PEC	180	260	448
C5261.200PE	C5261.200PEC	200	309	562
C5261.225PE	C5261.225PEC	225	309	562
C5261.250PE	C5261.250PEC	250	339	664
C5261.280PE	C5261.280PEC	280	339	664
C5261.315PE	C5261.315PEC	315	380	740

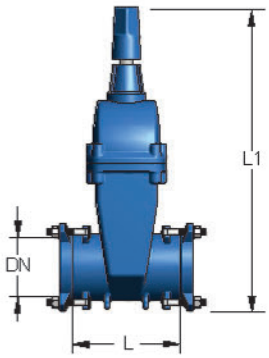

Note: Series 05 AVK Support Bushes to be used with these valves.

AVK Support Bushes Series 05

Product code	Nominal diameter DN (mm)
C05090	90
C050110	110
C050125	125
C050140	140
C050160	160
C050180	180
C050200	200
C050225	225
C050250	250
C050280	280
C050315	315

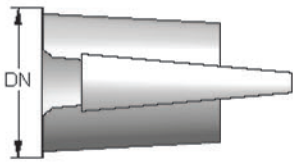

Note:
- All dimensions, masses & volumes are approximate only. If critical contact Iplex Pipelines.

AVK Gate Valves

AVK Gate Valves Series 57/90:

Product code anti-clockwise closing	Product code clockwise closing	Typical dimensions		
		Nominal diameter DN (mm)	Dim. (mm) L	Dim. (mm) L1
C523.05	C523.05C	50	178	329
C523.06	C523.06C	65	190	335
C523.08	C523.08C	80	203	345
C523.10	C523.10C	100	229	380
C523.15	C523.15C	150	267	474
C523.20	C523.20C	200	292	574
C523.22	C523.22C	225	305	651
C523.25	C523.25C	250	330	662
C523.30	C523.30C	300	356	730
C523.37	C523.37C	375	381	905
C523.40	C523.40C	400	406	930

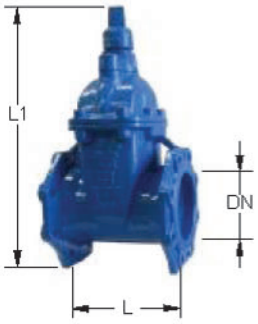

AVK Double Flanged Butterfly Valve Series 813/82:

Product code	Typical dimensions		
	Nominal diameter DN (mm)	Dim. (mm) L	Dim. (mm) L1
C5858.08L	80	114	286
C5858.100L	100	127	323
C5858.150L	150	140	375

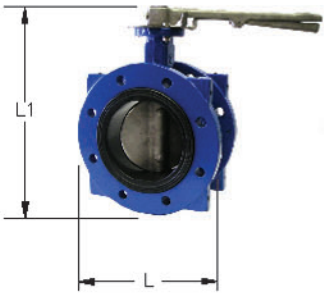

+GF+ WAGA Multi Joint Restraint 3007 Plus Wide Range Coupling

Product code	Typical dimensions		
	Nominal diameter DN (mm)	Suit DN	Dim. (mm) L1
EG709305214	90	84-105	234-262
EG709305216	110/125	104-132	230-268
EG709305218	140	132-155	246-282
EG709305220	160/180	154-192	242-298
EG709305224	220/225	192-232	297-351
EG709305226	250	232-257	342-404
EG709305228	280	267-310	354-424
EG709305232*	315	315-356	356-426
EG709305236*	355	352-393	-
EG709305240*	400	392-433	-

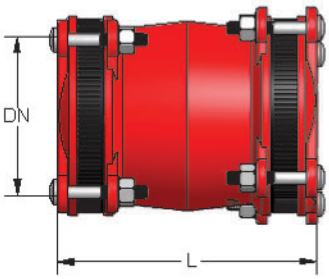

*Note: * Rated at PN10*
Support bushes must be used with these fittings

Note:
- All dimensions, masses & volumes are approximate only. If critical contact Iplex Pipelines.

+GF+ Multi Joint Inserts Stainless Steel 316

Product code	Typical dimensions	
	Nominal diameter DN (mm)	SDR
EG709026233	90	17
EG709026230	90	11
EG709026245	110	17
EG709026242	110	11
EG709026257	125	17
EG709026254	125	11
EG709026269	140	17
EG709026266	140	11
EG709026281	160	17
EG709026278	160	11
EG709026408	180	17
EG709026290	180	11
EG709026409	200	17
EG709026302	200	11
EG709026410	225	17
EG709026314	225	11
EG709026411	250	17
EG709026326	250	11
EG709026340	280	17
EG709026338	280	11
EG709026413	315	17
EG709026350	315	11
EG709026414	355	17
EG709026362	355	11

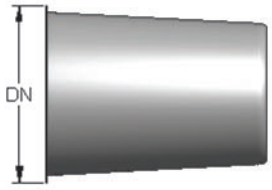

+GF+ ELGEF Plus Ball Valve

Product code	Typical dimensions				
	Nominal diameter DN (mm)	Dim. (mm) L	Dim. (mm) L1	Dim. (mm) L2	Dim. (mm) L3
EG193103206	20	264	72	134	96
EG193103207	25	264	72	134	96
EG193103208	32	274	76	134	96
EG193103209	40	301	85	142	100
EG193103210	50	327	92	156	107
EG193103211	63	350	101	173	114
EG193103212	75	376	114	173	114
EG193103213	90	439	128	240	158
EG193103214	110	497	148	267	171
EG193103040	125	405	112	365	280
EG193103042	160	540	123	481	364
EG193103043	180	540	123	481	364
EG193103044	200	540	123	481	364
EG193103045	225	877	240	755	540

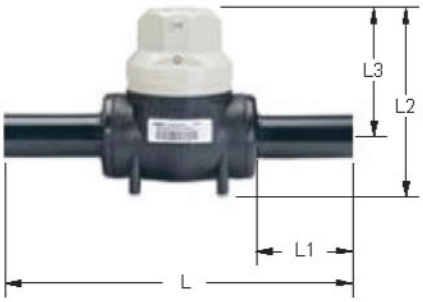

Note:
- All dimensions, masses & volumes are approximate only. If critical contact Iplex Pipelines.

Poly Plus Metric Compression Fittings

Plain Couplings:

Product code	Typical dimensions	
	Nominal diameter DN (mm)	Dim. (mm) L
M4116	16	114
M4120	20	144
M4125	25	124
M4132	32	136
M4140	40	176
M4150	50	195
M4163	63	248
M4175	75	278
M4190	90	336
M41110	110	381

Repair Couplings (without pipe stop):

Product Code	Typical Dimensions	
	Nominal Diameter DN (mm)	Dim. (mm) L
M4220	20	114
M4225	25	126
M4232	32	131
M4240	40	188
M4250	50	207
M4263	63	248
M4275	75	290
M4290	90	322
M42110	110	362

Reducing Couplings:

Product code	Typical dimensions		
	Nominal diameter DN1 (mm)	Nominal diameter DN2 (mm)	Dim. (mm) L
M512520	25	20	133
M513220	32	20	130
M513225	32	25	130
M514025	40	25	160
M514032	40	32	164
M515032	50	32	175
M515040	50	40	204
M516332	63	32	210
M516340	63	40	216
M516350	63	50	216
M517550	75	50	237
M517563	75	63	249
M519063	90	63	292
M519075	90	75	366
M5111090	110	90	363

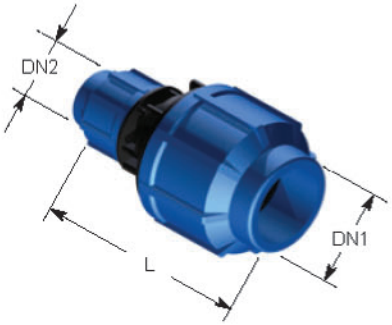

Note:
- All dimensions, masses & volumes are approximate only. If critical contact Iplex Pipelines.
- Other sizes are available. Contact Iplex Pipelines for more information.

Poly Plus Metric Compression Fittings

Male Adaptors:

Product code	Typical dimensions		
	Nominal diameter DN1 (mm)	Diameter (inch) R	Dim. (mm) L
M211615	16	½"	76
M212015	20	½"	76
M212020	20	¾"	77
M212025	20	1"	79
M212515	25	½"	80
M212520	25	¾"	82
M212525	25	1"	86
M213220	32	¾"	89
M213225	32	1"	92
M213232	32	1 ¼"	94
M213240	32	1 ½"	93
M214025	40	1"	113
M214032	40	1 ¼"	115
M214040	40	1 ½"	115
M214050	40	2"	115
M215025	50	1"	125
M215032	50	1 ¼"	127
M215040	50	1 ½"	126
M215050	50	2"	132
M216340	63	1 ½"	154
M216350	63	2"	156
M216363	63	2 ½"	160
M217550	75	2"	177
M217563	75	2 ½"	178
M217575	75	3"	178
M219050	90	2"	205
M219063	90	2 ½"	210
M219075	90	3"	210
M2190100	90	4"	216
M2111075	110	3"	226
M21110100	110	4"	231

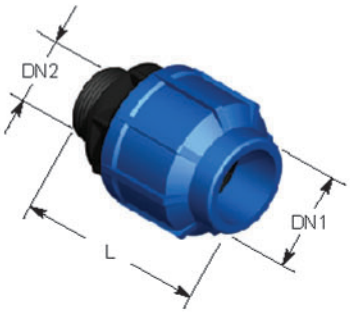

Female Adaptors:

Product code	Typical dimensions		
	Nominal diameter DN1 (mm)	Diameter (inch) R	Dim. (mm) L
M311615	16	½"	78
M311620	16	¾"	78
M312015	20	½"	78
M312020	20	¾"	78
M312520	25	¾"	86
M312525	25	1"	86
M313220	32	¾"	95
M313225	32	1"	95
M313232	32	1 ¼"	96
M314025	40	1"	111
M314032	40	1 ¼"	116
M314040	40	1 ½"	116
M315025	50	1"	123
M315032	50	1 ¼"	129
M315040	50	1 ½"	128
M315050	50	2"	133
M316340	63	1 ½"	158
M316350	63	2"	161
M316363	63	2 ½"	162
M317550	75	2"	169
M317563	75	2 ½"	174
M317575	75	3"	174
M319050	90	2"	196
M319063	90	2 ½"	210
M319075	90	3"	196
M3111075	110	3"	215
M31110100	110	4"	215

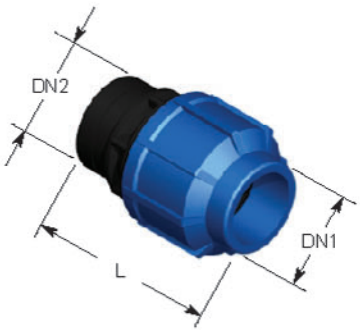

Note:

- All dimensions, masses & volumes are approximate only. If critical contact Iplex Pipelines.
- Other sizes are available. Contact Iplex Pipelines for more information.

Poly Plus Metric Compression Fittings

90° Tees:

Product code	Typical dimensions		
	Nominal diameter DN (mm)	Dim. (mm) L	Dim. (mm) L1
M6116	16	138	55
M6120	20	138	55
M6125	25	153	77
M6132	32	175	87
M6140	40	238	118
M6150	50	259	128
M6163	63	317	160
M6175	75	360	180
M6190	90	472	140
M61110	110	512	260

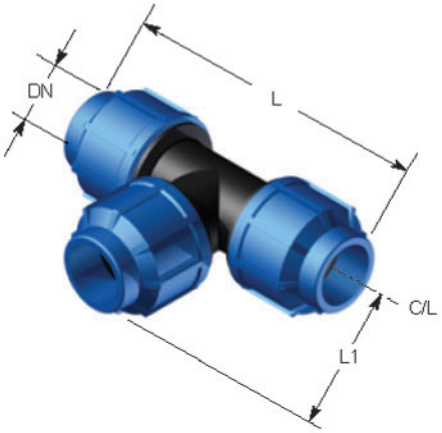

Reducing Tees:

Product code	Typical dimensions		
	Nominal diameter DN1 (mm)	Nominal diameter DN2 (mm)	Dim. (mm) L
M812520	25	20	153
M813225	32	25	173
M814032	40	32	238
M815032	50	32	259
M815040	50	40	259
M816332	63	32	317
M816350	63	50	317
M817563	75	63	360
M819075	90	75	472
M8111090	110	90	512

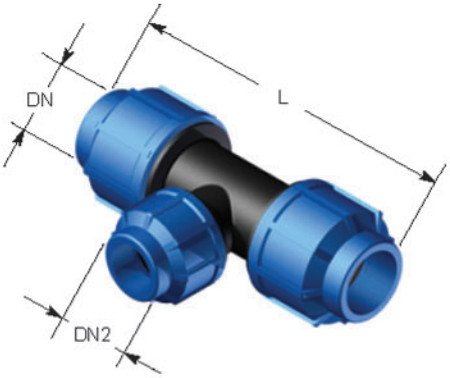

Tee with Treaded Female Offtakes:

Product code	Typical dimensions			
	Nominal diameter DN1 (mm)	Nominal diameter DN2 (mm)	Dim. (mm) L	Dim. (mm) L1
M711615	16	½"	142	48
M712015	20	½"	143	48
M712020	20	¾"	143	53
M712515	25	½"	153	52
M712520	25	¾"	153	37
M712525	25	1"	153	59
M713220	32	¾"	175	41
M713225	32	1"	175	43
M713232	32	1 ¼"	175	46
M714025	40	1"	238	53
M714032	40	1 ¼"	238	53
M714040	40	1 ½"	238	53
M715025	50	1"	260	63
M715040	50	1 ½"	260	63
M715050	50	2"	260	75
M716340	63	1 ½"	317	70
M716350	63	2"	317	70
M717550	75	2"	360	75
M717563	75	2 ½"	360	75
M717575	75	3"	360	75
M719075	90	3"	472	101
M71110100	110	4"	512	115

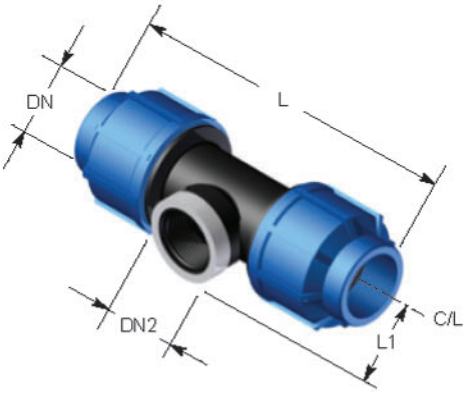

Note:

- All dimensions, masses & volumes are approximate only. If critical contact Iplex Pipelines.
- Other sizes are available. Contact Iplex Pipelines for more information.

Poly Plus Metric Compression Fittings

Tee with Threaded Male Offtakes:

Product Code	Typical Dimensions			
	Nominal Diameter DN (mm)	Diameter (Inch) R	Dim. (mm) L	Dim. (mm) L1
M1022515	25	½"	153	52
M1022520	25	¾"	153	54
M1022525	25	1"	153	52
M1023215	32	¾"	175	60
M1023225	32	1"	175	60
M1024032	40	1¼"	238	73
M1024040	40	1½"	238	73
M1025040	50	1½"	259	80
M1026350	63	2"	317	82
M1027575	75	3"	360	105
M1029075	90	3"	472	132
M102110100	110	4"	512	145

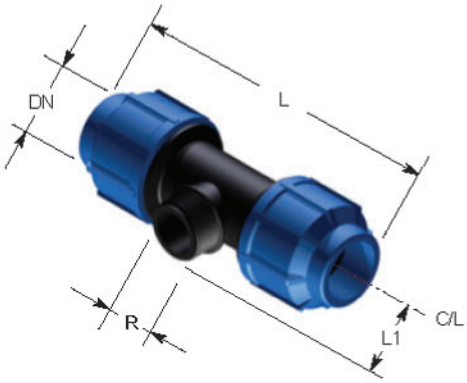

90° Elbows:

Product code	Typical dimensions	
	Nominal diameter DN (mm)	Dim. (mm) L
M9116	16	71
M9120	20	71
M9125	25	77
M9132	32	88
M9140	40	117
M9150	50	128
M9163	63	160
M9175	75	178
M9190	90	235
M91110	110	250

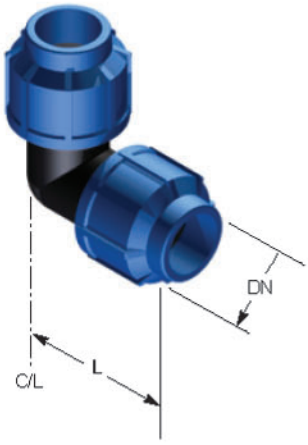

45° Elbows:

Product code	Typical dimensions	
	Nominal diameter DN (mm)	Dim. (mm) L
M9320	20	65
M9325	25	74
M9332	32	82
M9340	40	108
M9350	50	128
M9363	63	150

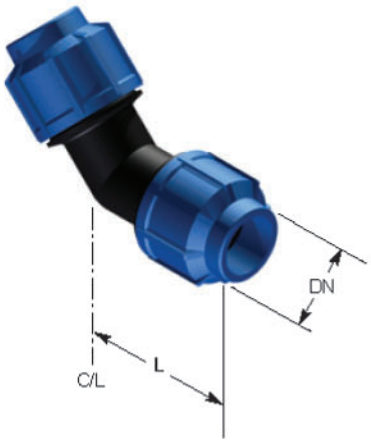

Note:

- All dimensions, masses & volumes are approximate only. If critical contact Iplex Pipelines.
- Other sizes are available. Contact Iplex Pipelines for more information.

Poly Plus Metric Compression Fittings

90° Elbow with Treaded Female Offtakes:

Product code	Typical dimensions		
	Nominal diameter DN (mm)	Diameter (inch) R	Dim. (mm) L
M1011615	16	½"	71
M1012015	20	½"	71
M1012020	20	¾"	71
M1012515	25	½"	76
M1012520	25	¾"	77
M1012525	25	1"	77
M1013220	32	¾"	87
M1013225	32	1"	87
M1013232	32	1 ¼"	87
M1014025	40	1"	120
M1014032	40	1 ¼"	120
M1014040	40	1 ½"	120
M1015025	50	1"	130
M1015040	50	1 ½"	130
M1015050	50	2"	130
M1016340	63	1 ½"	160
M1016350	63	2"	160
M1017550	75	2"	178
M1017563	75	2 ½"	178
M1017575	75	3"	178
M1019075	90	3"	235
M101110100	110	4"	250

90° Elbow with Treaded Male Offtakes:

Product code	Typical dimensions		
	Nominal diameter DN (mm)	Diameter (inch) R	Dim. (mm) L
M1032015	20	½"	71
M1032020	20	¾"	71
M1032520	25	¾"	77
M1032525	25	1"	77
M1033225	32	1"	88
M1034025	40	1"	115
M1034032	40	1 ¼"	117
M1034040	40	1 ½"	117
M1035040	50	1 ½"	128
M1036350	63	2"	160
M1037563	75	2 ½"	178
M1037575	75	3"	178
M1039075	90	3"	240
M10390100	90	4"	245
M10311075	110	3"	245
M103110100	110	4"	256

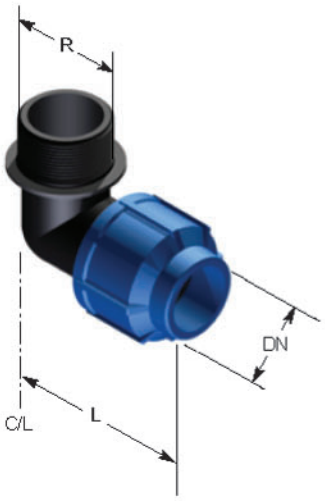

Note:
- All dimensions, masses & volumes are approximate only. If critical contact Iplex Pipelines.
- Other sizes are available. Contact Iplex Pipelines for more information.

Poly Plus Metric Compression Fittings

End Caps:

Product code	Typical dimensions	
	Nominal diameter DN (mm)	Dim. (mm) L
M17120	20	69
M17125	25	76
M17132	32	90
M17140	40	112
M17150	50	129
M17163	63	160
M17175	75	180
M17190	90	220
M171110	110	234

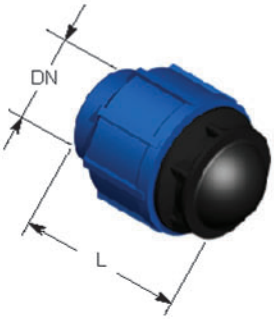

Flanged Joints with Metal Flange AS 2129 Table E:

Product code	Typical dimensions		
	Nominal diameter DN (mm)	Diameter (inch) R	Dim. (mm) L1
M235050	50	2"	170
M236350	63	2"	193
M236363	63	2 ½"	195
M237563	75	2 ½"	197
M237575	75	3"	197
M239075	90	3"	232
M2390100	90	4"	232
M23110100	110	4"	239

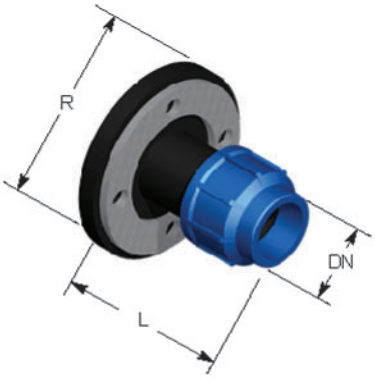

Polyethylene Universal Adaptors:

Product code	Typical dimensions		
	Nominal diameter DN (mm)	Nominal diameter DN2 (mm)	Dim. (mm) L
M36251521	25	15-21	119
M36252127	25	21-27	127
M36252735	25	27-35	151
M36322127	32	21-27	159
M36322735	32	27-35	174

Note: Rated at PN10

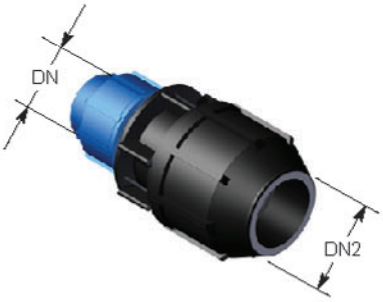

Note:
- All dimensions, masses & volumes are approximate only. If critical contact Iplex Pipelines.
- Other sizes are available. Contact Iplex Pipelines for more information.

Poly Plus Metric Compression Fittings

Polyethylene to Copper Elbows:

Product code	Typical dimensions	
	Nominal diameter DN (mm)	Nominal diameter R (inch)
M352520	25	¾"Cu

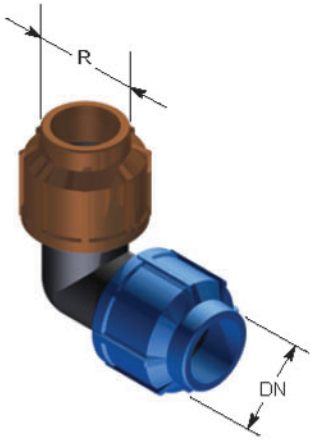

Polythylene to Copper Tees:

Product code	Typical dimensions	
	Nominal diameter DN (mm)	Nominal diameter R (inch)
M722515	25	½"Cu
M722520	25	¾"Cu

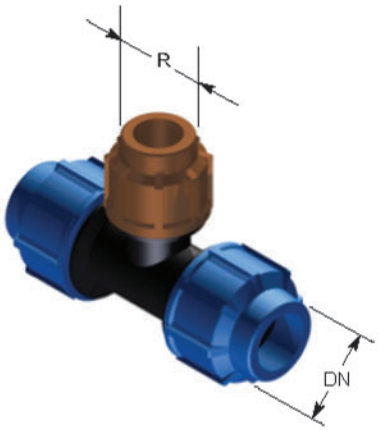

Polyethylene to Copper Adaptors:

Product code	Typical dimensions	
	Nominal diameter DN (mm)	Nominal diameter R (inch)
M321615	16	½"Cu
M322015	20	½"Cu
M322020	20	¾"Cu
M322525	25	1"Cu
M323220	32	¾"Cu
M322520	25	¾"Cu

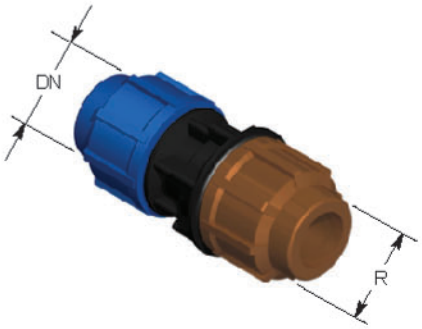

Note:

- All dimensions, masses & volumes are approximate only. If critical contact Iplex Pipelines.
- Other sizes are available. Contact Iplex Pipelines for more information.

Poly Plus Metric Compression Fittings

Tapping Saddles with Stainless Steel Bolts:

Product code	Typical dimensions				
	Nominal diameter DN (mm)	Diameter (inch) R	No bolts	Bolt type	Dim. (mm) L1
M0762515	25	½"	2	M8X30	49
M0763215	32	½"	2	M8X30	49
M0763220*	32	¾"	2	M8X30	49
M0763225	32	1"	2	M8X40	62
M0764020	40	¾"	2	M8X40	62
M0764025	40	1"	2	M8X40	62
M0765015	50	½"	4	M8X40	62
M0765020	50	¾"	4	M8X40	62
M0765032	50	1 ¼"	4	M8X40	62
M0766320	63	¾"	4	M8X40	62
M0766325	63	1"	4	M8X40	62
M0766332	63	1 ¼"	4	M8X40	62
M0766340	63	1 ½"	4	M8X40	62
M0767520	75	¾"	4	M8X60	79
M0767525	75	1"	4	M8X60	79
M0767550	75	2"	4	M8X60	79
M0769025	90	1"	4	M8X60	87
M0769040	90	1 ½"	4	M8X60	87
M0769050	90	2"	4	M8X60	87
M07611025	110	1"	6	M8X50	99
M07611040	110	1 ½"	6	M8X50	99
M07611050	110	2"	6	M8X50	99
M07611075*	110	3"	6	M8X70	99
M07612525	125	1"	6	M8X50	101
M07612550	125	2"	6	M8X50	101
M07612575*	125	3"	6	M8X70	139
M076125100*	125	4"	6	M8X70	139
M07614025	140	1"	6	M8X70	114
M07614075*	140	3"	6	M8X70	142
M07616025	160	1"	6	M8X70	114
M07616050	160	2"	6	M8X70	114
M07616075*	160	3"	6	M8X70	142
M07618025*	180	1"	6	M10X80	169
M07618050*	180	2"	6	M10X80	169
M076180100*	180	4"	6	M10X80	169
M07620050*	200	2"	6	M10X80	169
M07622550*	225	2"	6	M10X80	287
M07622575*	225	3"	6	M10X80	287
M076225100*	225	4"	6	M10X80	287
M07625050	250	2"	6	M10X80	310
M07625075*	250	3"	6	M10X80	310
M076250100*	250	4"	6	M10X80	310
M07628050*	280	2"	6	M10X160	335
M07628075*	280	3"	6	M10X160	335
M076280100*	280	4"	6	M10X160	335
M07631550	315	2"	6	M10X110	390
M07631575*	315	3"	6	M10X110	390
M076315100*	315	4"	6	M10X110	390

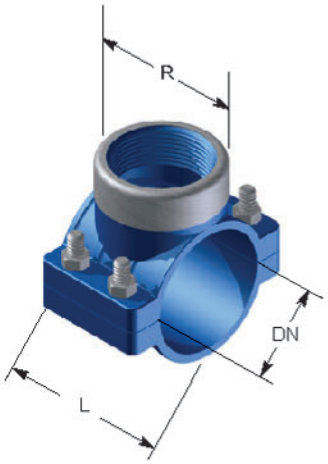

** Includes O-ring gasket*

Note:
- All dimensions, masses & volumes are approximate only. If critical contact Iplex Pipelines.
- Other sizes are available. Contact Iplex Pipelines for more information.

Rural Compression Fittings

Plain Couplings:

Product code	Typical dimensions Nominal diameter DN (inch)
701320	¾"
701325	1"
701332	1 ¼"
701340	1 ½"
701350	2"

Reducing Couplings:

Product code	Typical dimensions Nominal diameter DN1 (inch)	Nominal diameter DN2 (inch)
71132520	1"	¾"
71133225	1 ¼"	1"
71334032	1 ½"	1 ¼"
71335040	2"	1 ½"

Male Adaptors:

Product code	Typical dimensions Nominal diameter DN1 (inch)	Diameter (inch) R
70232015	¾"	½"
70232020	¾"	¾"
70232520	1"	¾"
70232525	1"	1"
70233225	1 ¼"	1"
70233232	1 ¼"	1 ½"
70234032	1 ½"	1 ¼"
70234040	1 ½"	1 ½"
70235040	2"	1 ½"
70235050	2"	2"

Female Adaptors:

Product code	Typical dimensions Nominal diameter DN1 (inch)	Diameter (inch) R
70332020	¾"	¾"
70332520	1"	¾"
70332525	1"	1"
70333232	1 ¼"	1 ¼"
70334032	1 ½"	1 ¼"
70334040	1 ½"	1 ½"
70335040	2"	1 ½"
70335050	2"	2"

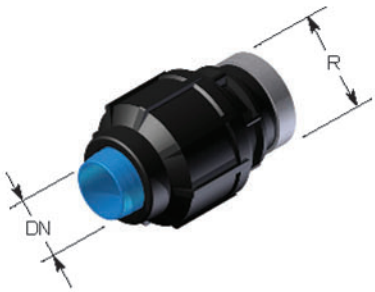

Note:

- All dimensions, masses & volumes are approximate only. If critical contact Iplex Pipelines.
- Other sizes are available. Contact Iplex Pipelines for more information.

Rural Compression Fittings

Equal Tees:

Product code	Typical dimensions
	Nominal diameter DN (inch)
704320	¾"
704325	1"
704332	1 ½"
704340	1 ½"
704350	2"

Reducing Tees:

Product code	Typical dimensions	
	Nominal diameter DN1 (inch)	Nominal diameter DN2 (inch)
73432520	1"	¾"
73433225	1 ¼"	1"
73435040	2"	1 ½"

Tee with Thread Female Offtakes:

Product code	Typical dimensions	
	Nominal diameter DN1 (inch)	Diameter (inch) R
71432020	¾"	¾"
71432515	1"	½"
71432520	1"	¾"
71432525	1"	1"
71433220	1 ¼"	¾"
71433225	1 ¼"	1"
71434032	1 ½"	1 ¼"
71434040	1 ½"	1 ½"
71435040	2"	1 ½"
71435050	2"	2"

90° Elbows:

Product code	Typical dimensions
	Nominal diameter DN1 (inch)
705320	¾"
705325	1"
705332	1 ½"
705340	1 ½"
705350	2"

Note:

- All dimensions, masses & volumes are approximate only. If critical contact Iplex Pipelines.
- Other sizes are available. Contact Iplex Pipelines for more information.

Rural Compression Fittings

90° Elbow with Threaded Female Offtakes:

Product code	Typical dimensions	
	Nominal diameter DN1 (inch)	Diameter (inch) R
71532015	¾"	½"
71532020	¾"	¾"
71532515	1"	½"
71532520	1"	¾"
71532525	1"	1"
71533225	1 ¼"	1"
71534032	1 ½"	1 ¼"
71534040	1 ½"	1 ½"
71535040	2"	1 ½"
71535050	2"	2"

90° Elbow with Threaded Male Offtakes:

Product code	Typical dimensions	
	Nominal diameter DN1 (inch)	Nominal diameter DN2 (inch)
78532520	1"	¾"
78533225	1 ¼"	1"
78534032	1 ½"	1 ¼"

End Plugs:

Product code	Typical dimensions
	Nominal diameter DN1 (inch)
712320	¾"
712325	1"
712332	1 ¼"
712340	1 ½"
712350	2"

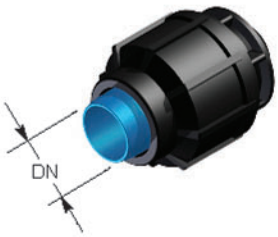

Tapping Saddles:

Product code	Typical dimensions	
	Nominal diameter DN1 (inch)	Diameter (inch) R
R0763220	1 ¼"	¾"
R0763225	1 ¼"	1"
R0764020	1 ½"	¾"
R0764025	1 ½"	1"
R0765020	2"	¾"
R0765025	2"	1"

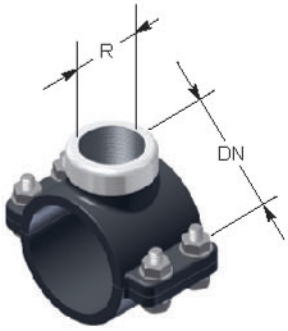

Note:

- All dimensions, masses & volumes are approximate only. If critical contact Iplex Pipelines.
- Other sizes are available. Contact Iplex Pipelines for more information.

Threaded Fittings

Sockets Female - BSP Threaded PP:

Product code	Typical dimensions Nominal diameter DN (inch)
501715	½"
501720	¾"
501725	1"
501732	1 ¼"
501740	1 ½"
501750	2"

Reducing Bushes - BSP Threaded PP:

Product code	Typical dimensions Nominal diameter DN1 (inch)	Nominal diameter DN2 (inch)
50272015	¾"	½"
50272515	1"	½"
50272520	1"	¾"
50273215	1 ¼"	½"
50273220	1 ¼"	¾"
50273225	1 ¼"	1"
50274015	1 ½"	½"
50274020	1 ½"	¾"
50274025	1 ½"	1"
50274032	1 ½"	1 ¼"
50275020	2"	¾"
50275025	2"	1"
50275032	2"	1 ¼"
50275040	2"	1 ½"
50276550	2 ½"	2"
50277550	3"	2"
50277565	3"	2 ½"
502710050	4"	2"

Tees Female - BSP Threaded PP:

Product code	Typical dimensions Nominal diameter DN (inch)
504715	½"
504720	¾"
504725	1"
504732	1 ¼"
504740	1 ½"
504750	2"

Elbows Female - BSP Threaded PP:

Product code	Typical dimensions Nominal diameter DN (inch)
505715	½"
505720	¾"
505725	1"
505732	1 ¼"
505740	1 ½"
505750	2"

Note:

- All dimensions, masses & volumes are approximate only. If critical contact Iplex Pipelines.
- Other sizes are available. Contact Iplex Pipelines for more information.

Threaded Fittings

Reducing Nipples - BSP Threaded PP:

Product code	Typical dimensions	
	Nominal diameter DN1 (inch)	Nominal diameter DN2 (inch)
50652015	¾"	½"
50652515	1"	½"
50652520	1"	¾"
50653220	1 ¼"	¾"
50653225	1 ¼"	1"
50654020	1 ½"	¾"
50654025	1 ½"	1"
50654032	1 ½"	1 ¼"
50655025	2"	1"
50655032	2"	1 ¼"
50655040	2"	1 ½"

Nipples - BSP Threaded PP:

Product code	Typical dimensions
	Nominal diameter DN (inch)
506715	½"
506720	¾"
506725	1"
506732	1 ¼"
506740	1 ½"
506750	2"
506765	2 ½"
506780	3"
5067100	4"

Reducing Sockets Female & Female - BSP Threaded PP:

Product code	Typical dimensions	
	Nominal diameter DN1 (inch)	Nominal diameter DN2 (inch)
51172015	¾"	½"
51172520	1"	¾"
51173225	1 ¼"	½"
51174032	1 ½"	1 ¼"

Plugs Male - BSP Threaded PP:

Product code	Typical dimensions
	Nominal diameter DN (inch)
517715	½"
517720	¾"
517725	1"
517732	1 ¼"
517740	1 ½"
517750	2"

Note:

- All dimensions, masses & volumes are approximate only. If critical contact Iplex Pipelines.
- Other sizes are available. Contact Iplex Pipelines for more information.

Threaded Fittings

Couplings Male & Female - BSP Threaded PP:

Product code	Typical dimensions	
	Nominal diameter DN1 (inch)	Nominal diameter DN2 (inch)
52272025	¾"	1"
52272520	1"	¾"

Quick Coupling Valves PP:

Product code	Typical dimensions
	Nominal diameter DN (inch)
303920	¾"
303925	1"

Risers for Quick Couplings PP:

Product code	Typical dimensions
	Nominal diameter DN (inch)
313920	¾"

Two Way Valves PP:

Product code	Typical dimensions
	Nominal diameter DN (inch)
340520	¾"
340525	1"

Note:

- All dimensions, masses & volumes are approximate only. If critical contact Iplex Pipelines.
- Other sizes are available. Contact Iplex Pipelines for more information.

Machines and Tools & Installation Aids

MSA 210 Monovalent Manual Electrofusion Unit:

Iplex code
EG790128001

MSA Plus 250 Polyvalent Automatic Electrofusion Unit:

Iplex code
EG799350550

MSA 330 Electrofusion Unit with Jointing Data Recording:

Iplex code	Type
EG790160004	Barcode reader pen, transport case
EG790160005	Barcode scanner, transport case

MSA 340 Traceability Electrofusion Unit with GPS Function:

Iplex code	Type
EG790160007	Barcode scanner, transport case

Electrofusion Unit Adaptor Pins:

Iplex code	Type
EG799350340	4.0mm Angle Adaptor Black
EG799350341	4.0mm-4.7mm Angle Adaptor
EG200060276	4.7mm-4.00m Straight Adaptor Pin

Note:
- All dimensions, masses & volumes are approximate only. If critical contact Iplex Pipelines.
- Unless otherwise stated all dimensions are in mm.

Machines and Tools & Installation Aids

TM 160-215-315 ECO Butt Fusion Machine:

Iplex code	d (mm)	Description
EG790150017	40 - 160	TM 160 ECO
EG790151017	75 - 250	TM 250 ECO
EG790152017	90 - 315	TM 315 ECO

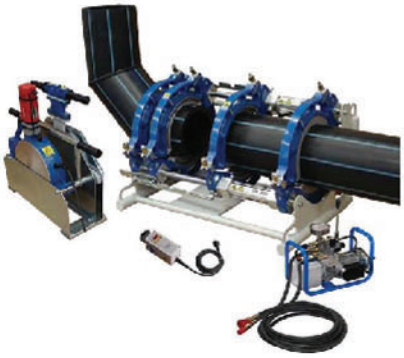

TM 160-250-315 TOP Butt Fusion Machine:

Iplex code	d (mm)	Description
EG790150011	40 - 160	TM 160 TOP
EG790151011	75 - 250	TM 250 TOP
EG790152026	90 - 315	TM 315 TOP

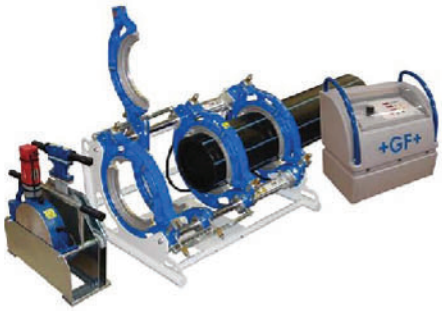

Reduction Clamping Inserts:

Iplex code	d-d (mm)
EG790114156	40-140
EG790115156	75-225
EG790112156	90-280

Note: - 4 wide and 4 narrow clamping inserts for each dimension
- Suitable for TM 160-250-315 ECO and TM 160-250-315 TOP butt fusion machines

TM 160-250-315 Flange Adaptor Clamping Units:

Iplex code	d-d (mm)
EG790319007	40-160
EG790115044	75-250
EG790112073	90-315

Note: Suitable for TM 160-250-315 ECO and
TM 160-250-315 TOP butt fusion machines

Note:
- All dimensions, masses & volumes are approximate only. If critical contact Iplex Pipelines.
- Unless otherwise stated all dimensions are in mm.

Machines and Tools & Installation Aids

KL 500 TOP1 Butt Fusion Machine:

Iplex code	d-d (mm)
EG790340000	200-500

KL 500 Reduction Clamp Inserts:

Iplex code	d-d (mm)
EG790116156	250-450

Note: 4 wide and 4 narrow clamping inserts for each dimension

KL 630 TOP1 Butt Fusion Machine:

Iplex code	d-d (mm)
EG79035000	315-630

KL 630 Reduction Clamp Inserts:

Iplex code	d-d (mm)
EG790117021	315-560

Note: 4 wide and 4 narrow clamping inserts d 315, d 355, d 400, d 450
8 wide reduction inserts d 500, d 560

PPC Plastic Pipe Cutter:

Iplex code	d-d (mm)
EG790109001	10-63
EG790109002	50-110
EG790109003	110-160

Note:
- All dimensions, masses & volumes are approximate only. If critical contact Iplex Pipelines.
- Unless otherwise stated all dimensions are in mm.

Machines and Tools & Installation Aids

Replacement Cutting Wheels for PPC:

Iplex code	d-d (mm)
EG790109011	10-63
EG790109012	50-110
EG790109013	110-160

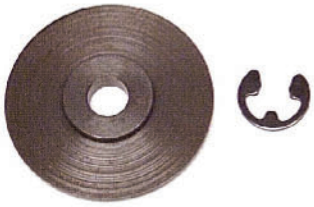

KL 355 Plastic Pipe Cutter:

Iplex code	d-d (mm)
EG790202001	160-355

Replacement Saw Blade ø180x30 KS 355:

Iplex code
EG790202011

Peeling Tool PT 2 Adjustable for a Range of Pipe Sizes:

Iplex code	d (mm)	Peeling length (mm)
EG799300753	90-250	140
EG799300755	110-400	150
EG799300756	110-500	175

Replacement Blade for PT 2 Peeling Tool:

Iplex code	d (mm)	Piece
EG799150355	90-500	1

Note:
- All dimensions, masses & volumes are approximate only. If critical contact Iplex Pipelines.
- Unless otherwise stated all dimensions are in mm.

Machines and Tools & Installation Aids

Rotary Peeler RS:

Iplex code	d (mm)	Article
EG790136001	40	RS 40
EG790136002	50	RS 50
EG790136003	63	RS 63
EG790136004	75	RS 75
EG790136005	90	RS 90
EG790136006	110	RS 110
EG790136007	125	RS 125
EG790136008	140	RS 140
EG790136009	160	RS 160
EG790136010	180	RS 180
EG790136011	200	RS 200
EG790136012	225	RS 225
EG790136013	250	RS 250
EG790136014	280	RS 280
EG790136015	315	RS 315

Replacement Blade for Rotary Peeler:

Iplex code	d-d (mm)
EG790136112	40-315

Double Clamp:

Iplex code	d-d (mm)
EG799301484	63-125
EG799301486	110-225
EG799301488	225-500

Quadruple Clamp:

Iplex code	d-d (mm)
EG799301459	63-125
EG799301461	110-225
EG799301463	225-500

Swivel Clamp:

Iplex code	d-d (mm)
EG799350358	63 - 180

Note:

- All dimensions, masses & volumes are approximate only. If critical contact Iplex Pipelines.
- Unless otherwise stated all dimensions are in mm.

Machines and Tools & Installation Aids

Clamping Device Topload 630:

Iplex code	d-d (mm)
EG799350477	280-630

Squeeze-off Tool Type 1:

Iplex code	d-d (mm)
EG799350107	20 - 63

Squeeze-off Tool Type 2:

Iplex code	d-d (mm)
EG799350108	63 - 180

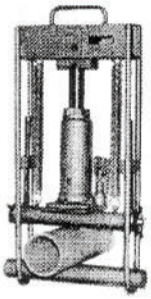

Re-rounding Tool:

Iplex code	d (mm)
EG799199127	25
EG799199128	32
EG799199129	40
EG799199130	50
EG799199131	63
EG799199132	75
EG799199133	90
EG799199134	110
EG799199135	125
EG799199137	160
EG799199138	180
EG799199139	200
EG799199140	225
EG799199141	250

Note: • *Larger sizes are available upon request*
• *Heavy duty hydraulic versions also available upon request*

Note:
- All dimensions, masses & volumes are approximate only. If critical contact Iplex Pipelines.
- Unless otherwise stated all dimensions are in mm.

Machines and Tools & Installation Aids

Assembly & Tapping Key for ELGEF Plus Saddles:

Iplex code	Type
EG799198047	8/10/17

Note: Suitable for all saddles

Accessories

Isopropanol Tissue:

Iplex code	Per Pack
EG799496011	100

Tangit Tissue Container:

Iplex code	Piece
EG799298024	1

Note:
- All dimensions, masses & volumes are approximate only. If critical contact Iplex Pipelines.
- Unless otherwise stated all dimensions are in mm.

iPLEX Pipelines

ABN 56 079 613 308

FOR ALL ENQUIRIES AND ORDERS CONTACT IPLEX ONLINE:

Phone : 13 18 40
Iplex Civil: 13 10 86
Fax : 13 18 60
Email : sales@iplexpipelines.com.au
www.iplex.com.au

IPV042013